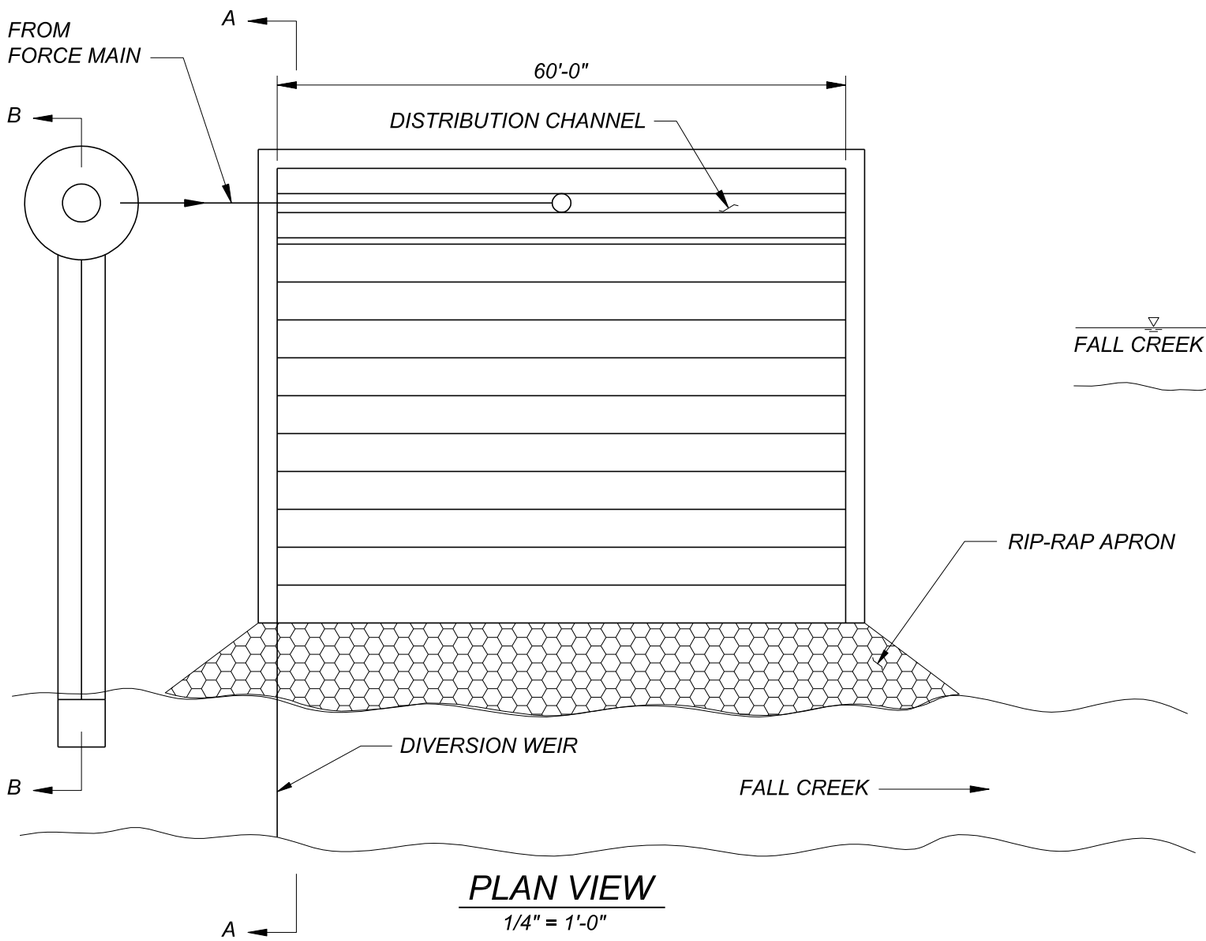

PLAN VIEW
1/4" = 1'-0"

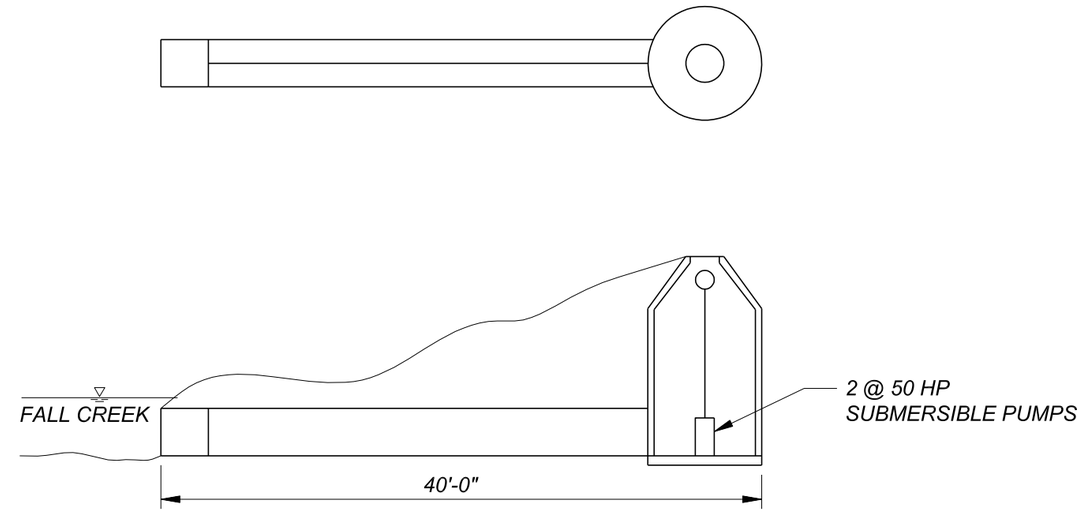

SECTION B-B
1/4" = 1'-0"

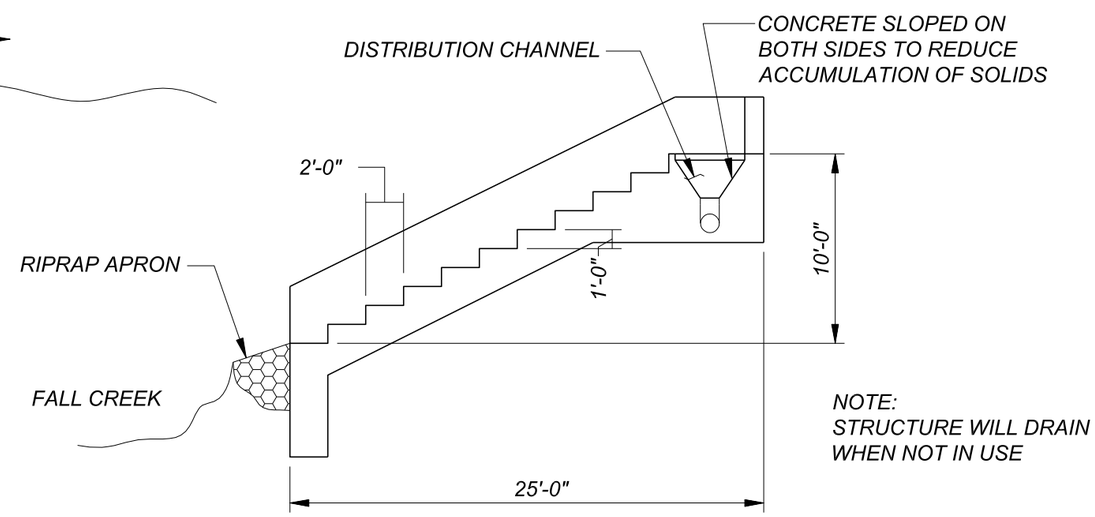

NOTE:
STRUCTURE WILL DRAIN
WHEN NOT IN USE

SECTION A-A
1/4" = 1'-0"

BLACK & VEATCH

DEPT OF PUBLIC WORKS/USACE
FALL CREEK EVALUATION STUDY
FINAL REPORT

SIDE-STREAM CASCADE AERATION
OUTFALL STRUCTURE DOWNSTREAM
OF KEYSTONE DAM DETAILS

PROJECT NO.
41330

FIGURE
13.8

FD41330_B
D41330_B