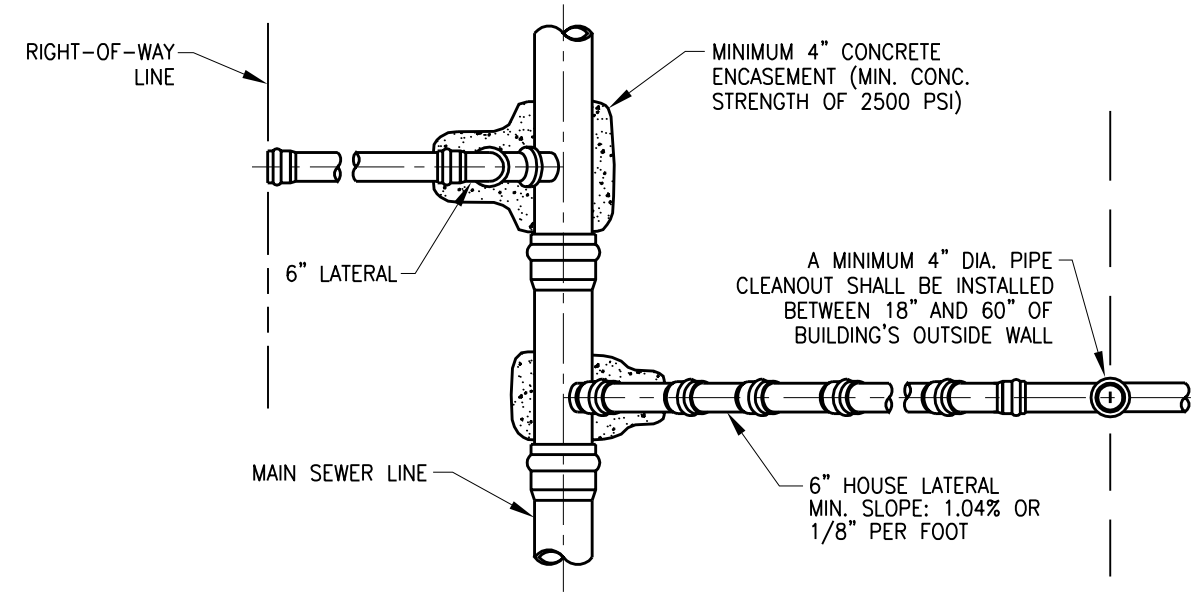

PLAN

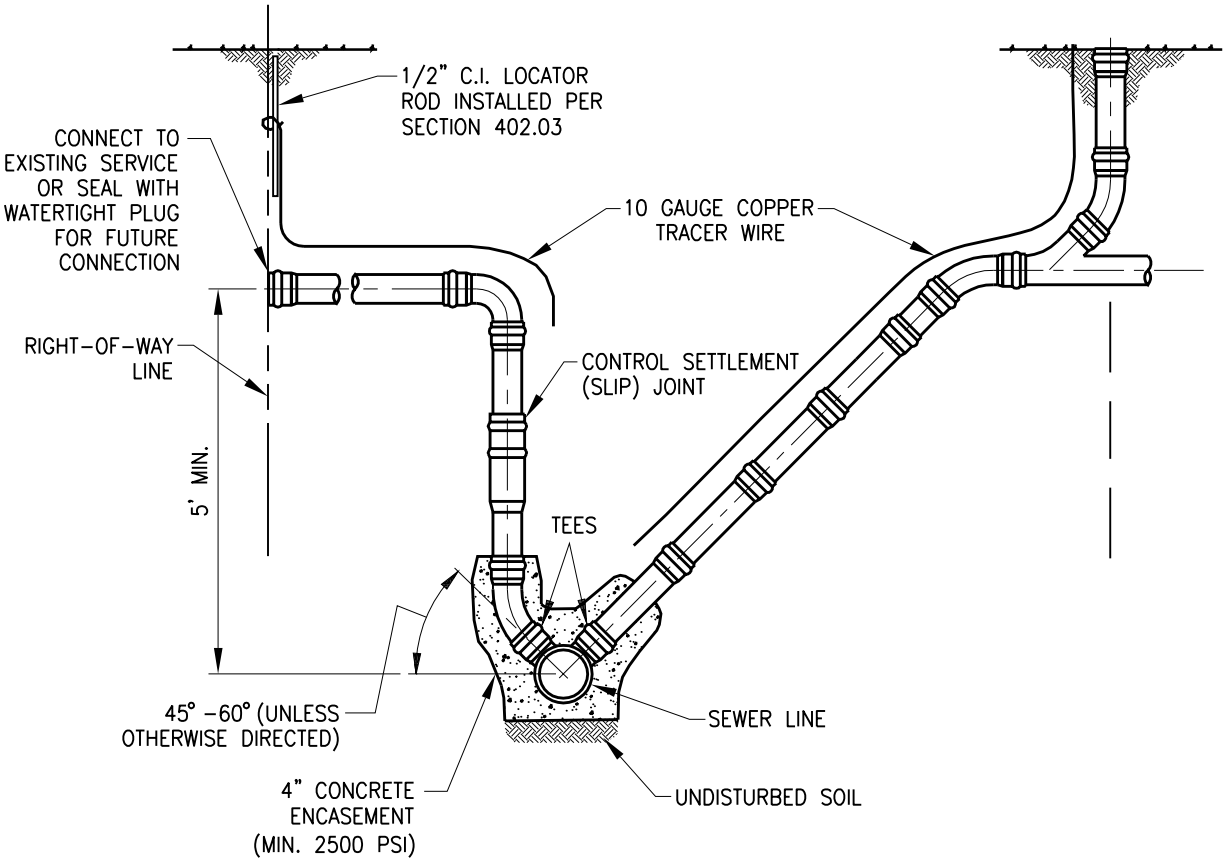

ELEVATION

NOT TO SCALE

INDIANAPOLIS DEPARTMENT OF PUBLIC WORKS

SERVICE CONNECTION FOR DEEP SEWERS (15' deep and over)

FIGURE 400.06