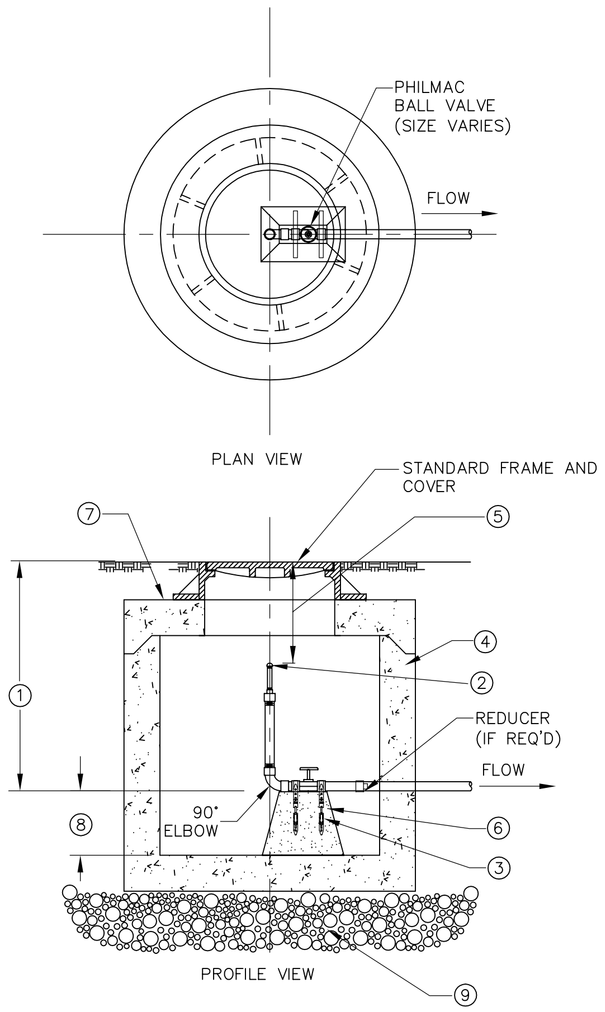

TERMINAL END CLEANOUT

N.T.S.

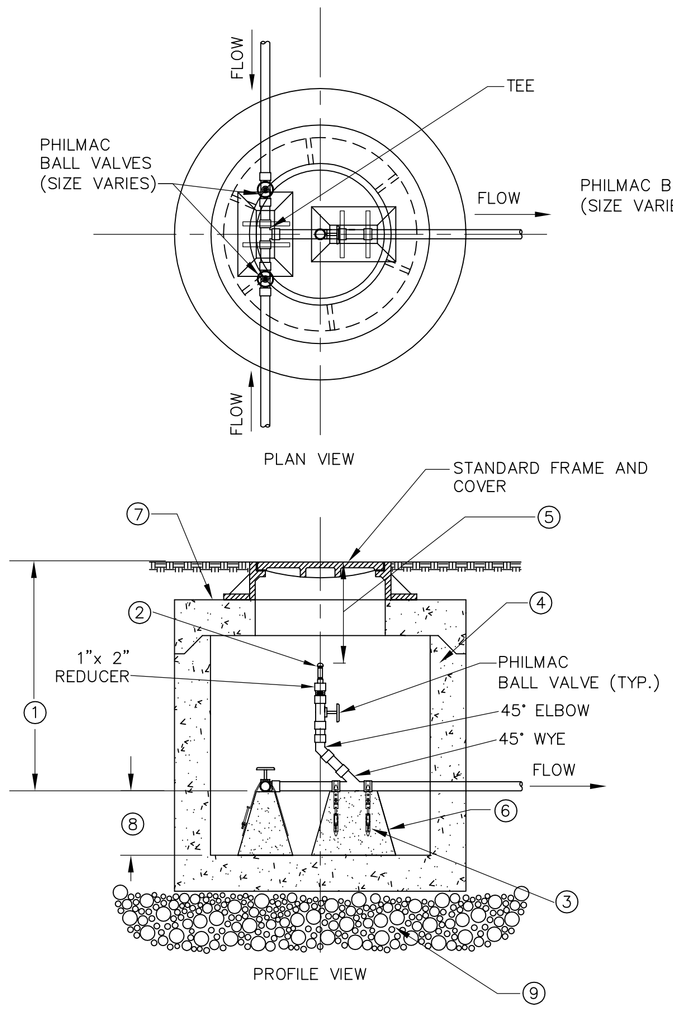

CONNECTION/ CLEANOUT

N.T.S.

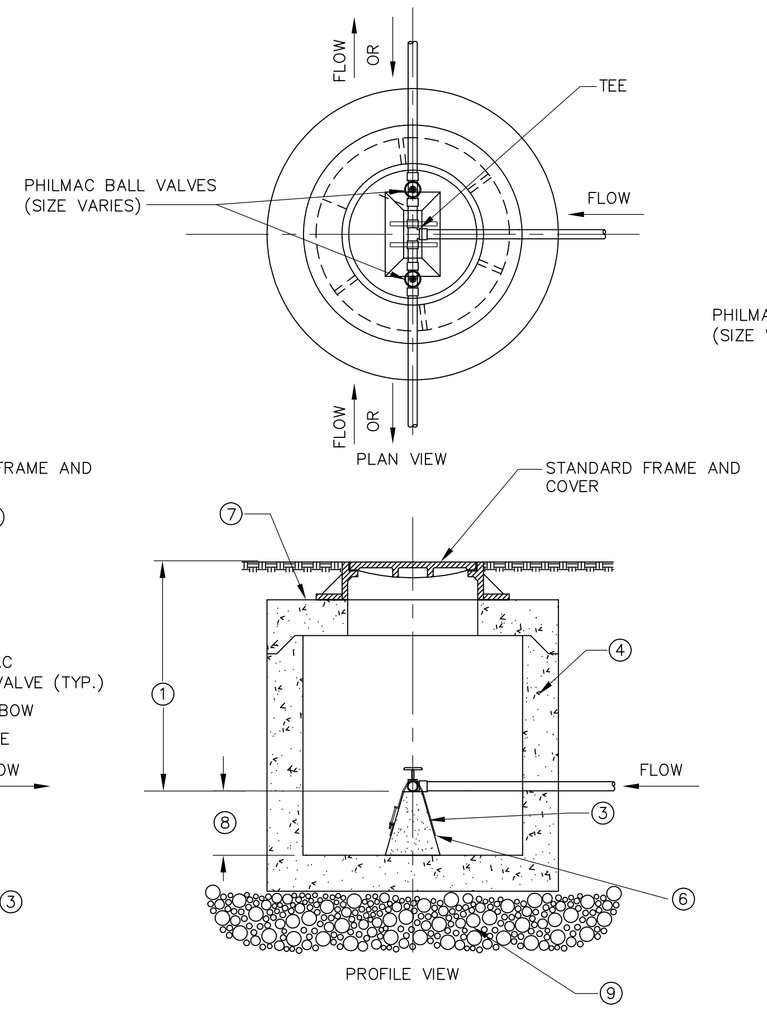

TEE CONNECTION

N.T.S.

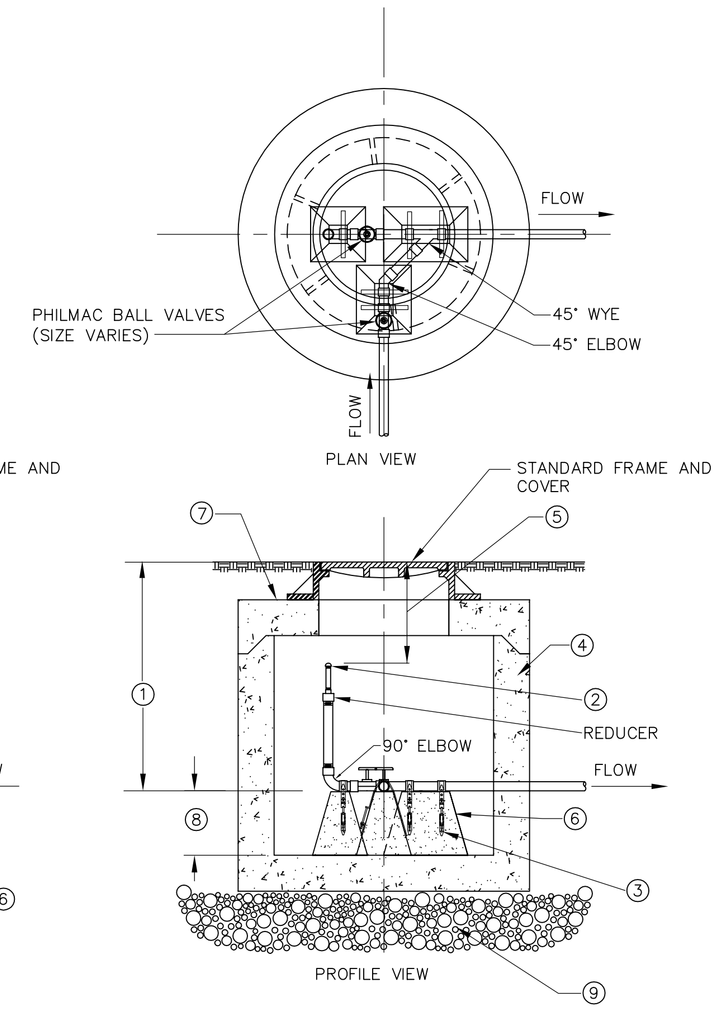

90° BEND/ CLEANOUT

N.T.S.

COMMON FORCE MAIN

PIPE TYPE: _____

SIZES: _____, IN.

LENGTH: _____, FT.

SIZES: _____, IN.

LENGTH: _____, FT.

SIZES: _____, IN.

LENGTH: _____, FT.

INDIVIDUAL UNITS

TYPE:

PD: _____

SEMI PD: _____

CENTRIFIGAL: _____

MAKE: _____

MODEL: _____

NUMBER UNITS

SIMPLEX _____ DUPLEX _____

MAX TDH FOR SINGLE PUMP OPERATION: _____,FT.

SERVICE AREA / SITE MAP

N.T.S.

NOTES

1. MIN. 54" COVER
2. CAP 1¼" PIPE COARSE THREAD
3. 304 S.S. STRAP W/ NEOPRENE SLEEVE
4. 4' MIN. DIA. PRECAST CONCRETE MANHOLE
5. MAX. 24"
6. CONCRETE THRUST BLOCK
7. PRECAST FLAT TOP
8. MIN. 1'
9. 6"–#8 CRUSHED STONE OR FRACTRED FACE AGGREGATE

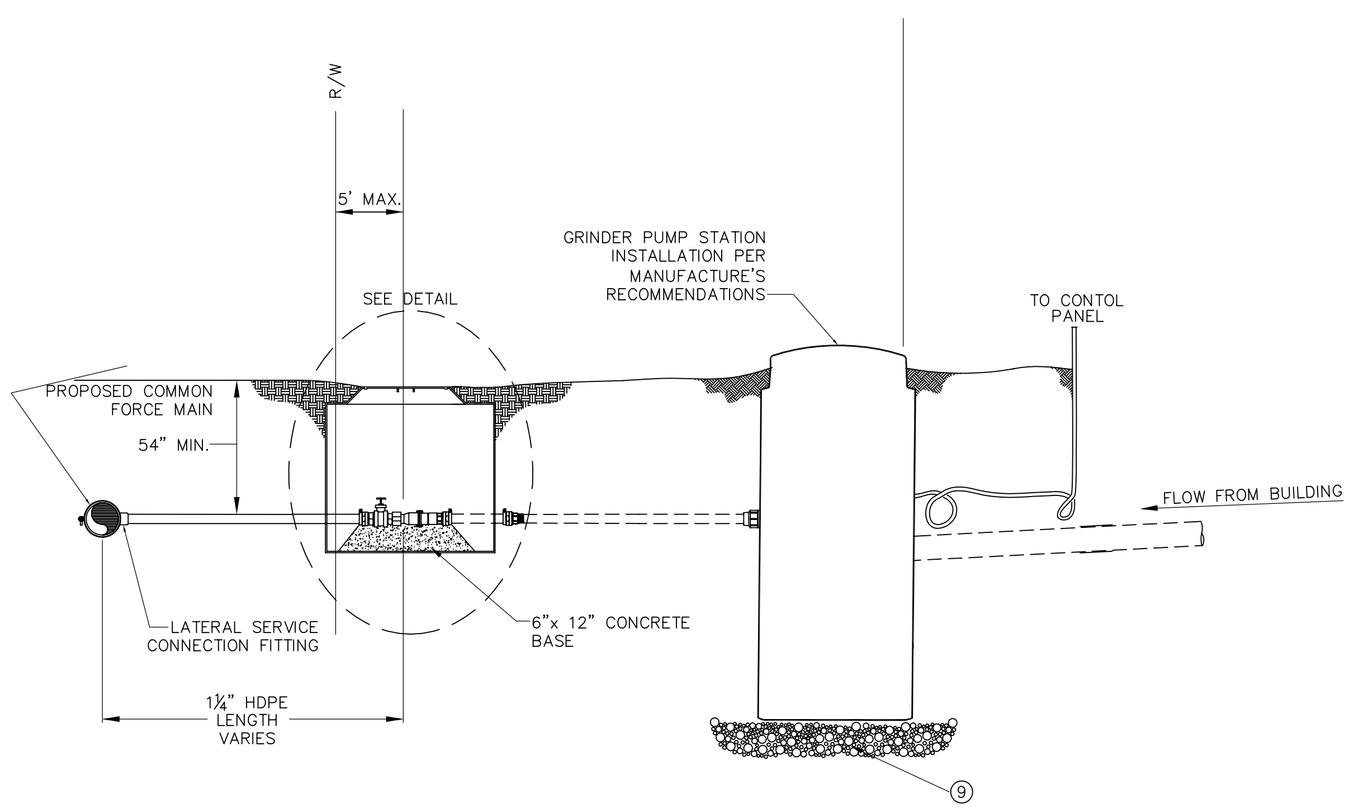

TYPICAL LATERAL INSTALLATION

N.T.S.

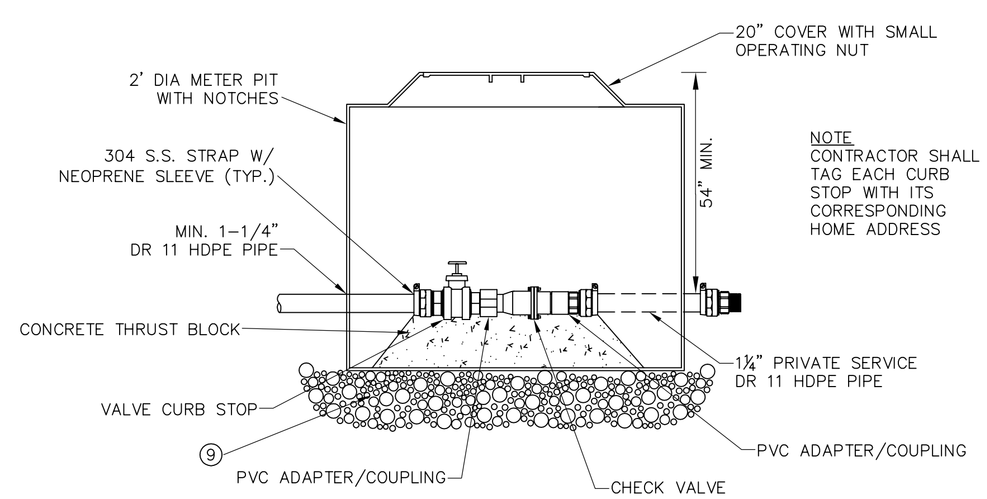

NOTE
CONTRACTOR SHALL TAG EACH CURB STOP WITH ITS CORRESPONDING HOME ADDRESS

NOTE:
1. MIN. PRESSURE RATING 150 psi
2 ALL PACK JOINT COUPLING REQUIRE INSERT STIFFENERS

TYPICAL LATERAL ASSEMBLY DETAIL

N.T.S.

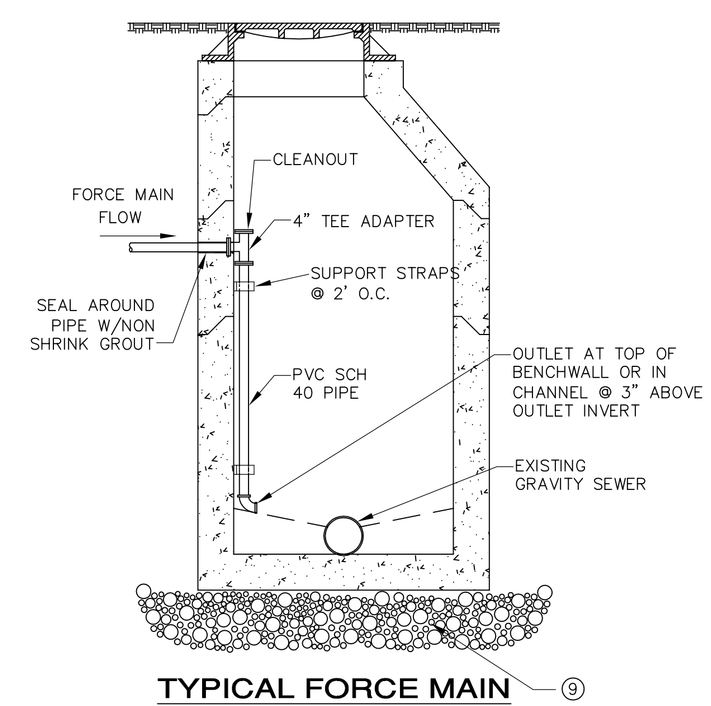

TYPICAL FORCE MAIN CONNECTION TO EXISTING MANHOLE

N.T.S.

City of Indianapolis DPW Department of Public Works

Revision Number	Revision Description	Drawn By	Checked By	Date

Filename	
Project No.	
Project Date	

CITY OF INDIANAPOLIS
DEPARTMENT OF PUBLIC WORKS

LOW PRESSURE SYSTEM

STANDARD DETAILS

SHEET NO.