CHAPTER 400 STORM SEWER PIPE AND OPEN CULVERT MATERIALS

SECTION 401 GENERAL

401.01 Material Markings

Each length of pipe or culvert, subsurface drainage tile, and each manholes and box inlet structure shall be marked per the requirements of each respective ASTM Standard referenced within this Chapter.

401.02 Certification of Materials

The Department shall reserve the right to require material certification from the manufacturer prior to or during construction of the stormwater drainage facilities as deemed necessary to ensure the material supplied conforms to the prescribed requirements. Provisions for obtaining this certification shall be the responsibility of the permit applicant. The City of Indianapolis does not assume the responsibility for the expense of obtaining material certification.

401.03 Material Testing and Inspection

The Department shall reserve the right to require the manufacturer, at the expense of the manufacturer, to perform those minimum inspections and tests set forth in each ASTM specification referenced herein. These inspections and tests will be required to ensure that the pipe or culvert material supplied conforms to prescribed requirements. This testing may be conducted by the quality control section of each individual manufacturer, or may be overseen or conducted by a qualified independent private testing laboratory. The manufacturer shall be defined as the producer of those materials required by this standard having direct responsibility and authority for the satisfaction of those minimum material specifications set forth herein. In those instances where independent inspection and testing are deemed necessary by the Department, the responsibility for the expense of these services will be arranged on a case by case basis.

401.04 Jacking and Boring Operations

Jacking and boring operations shall be in full conformance with the City of Indianapolis Sanitary District Standards for Design and Construction of Sanitary Sewer (latest revision).

The pipe materials accepted for jacking and boring shall be as follows:

1. Iron Pipe

   Class 50, 51, 52, or 54 ductile iron pipe in conformance with AWWA C 151, and cast iron pipe in conformance with AWWA C 106.

2. Steel Pipe

   Electric-fusion, arc-welded steel pipe in accordance with ASTM

A 139, grade B, or approved equal.

3. Reinforced Concrete Pipe

Reinforced concrete pipe of 30-inch inside diameter and over may be jacked, and shall be Class III or higher with gasketed, tongue and groove joints. All pipes shall have steel reinforcement concentric with the pipe wall, and additional reinforcement at the end of the pipe. The pipe shall be in accordance with ASTM C 76, and shall have a minimum 28-day compressive strength of 5000 psi.

Joint steel shall extend as deep as possible into the bell and spigot without destroying the continuity of the pipe joint. Bentonite fittings of sufficient size and frequency shall be provided based upon an evaluation of site conditions by the contractor, with consideration given to criteria for final acceptance of the installed system by the Department. A steel ring joint may be used in lieu of tongue and groove.

4. Other Materials

Other materials such as HOBAS fiberglass pipe will be approved for jacking and boring operations on a case by case basis by the Department, provided sufficient specifications and documentation of the accepted use of the alternative material has been reviewed and approved by the Department.

401.05
Underground Detention Storage Vaults

Underground detention storage vaults shall be constructed of accepted storm sewer pipe materials (Section 402), manufactured, tested, and installed according to those guidelines set forth herein. Poured-in-place, reinforced concrete vaults for underground detention storage shall also be approved on a case by case basis by the Department.

SECTION 402 PIPE MATERIALS

402.01
Introduction

The materials used in the construction of storm sewers and open culverts shall be in full conformance with those guidelines set forth below.

For the purpose of this Manual, a **storm sewer** shall be defined as:

> A network of pipe conduits and precast concrete manhole and/or box inlet structures, which collect and convey surface and subsurface (soil) water through gravity flow from a specified geographical area. A gravity flow system utilizes elevation gradients to cause water flow.

Subsurface drainage tiles, building floor drains, downspout outlets, roof conductors and sump pump lines are not considered as part of the requirements for storm sewers. Section 406 of this Chapter should be referenced for requirements relating to the connection of subsurface

drainage tile systems to the enclosed storm sewer system.

Stormwater conveyance systems which route an existing natural or man-made stream channel, open ditch, or storm sewer around or through a developing site shall be considered a storm sewer by this Department, and shall comply with the requirements of this section.

An open culvert shall be defined as a conduit open on both ends, intended to provide for free passage of surface water runoff under highways, streets, roads, shoulders, railroads and embankments.

Open culverts do not generally contain "in-line" manholes, surface inlets or catchbasins. The term "in-line" refers to a precast concrete manhole or box inlet as required by Section 404 of this Manual, which encompasses the entire diameter of the pipe conduit.

The definition of various classes of pipe materials shall be as follows:

1. Pipe Material Class No. 1 - Public Drainage Facilities (minimum 75 year design service life): All public facilities shall be constructed of Class No. 1 materials. Public Facilities shall mean any stormwater facility located within the public right-of-way or a drainage easement, either existing or proposed, as required by any ordinance, rule, regulation, or policy of the City of Indianapolis, its departments, Boards, or agents.

   By way of example, but not limitation, the ability to require the granting of drainage easements is provided by Chapter 10 ½, Section 10 ½-42, and within platted subdivision by the Subdivision Control Ordinance. The Department will require the granting of drainage easements for those stormwater facilities located outside of the public right-of-way, which drain greater than five (5) acres of off-site stormwater runoff. Off-site shall mean that property not under the same ownership as the parcel containing the stormwater facilities.

   The granting of a drainage easement to the City of Indianapolis does not create a responsibility for the City to maintain the drainage facilities located within the easement area.

2. Pipe Material Class No. 2 - Open Culvert Facilities (minimum 50 year service life): Open culverts, except those driveway culverts located within the public right-of-way shall be constructed of Class No. 2 materials. Open culverts shall be defined as those drainage conduits which are open on both ends, and intended to provide for free passage of surface water runoff under highways, streets, roads, drives, shoulders, railroads, or other embankments.

3. Pipe Material Class No. 3 - Private Drainage Facilities (minimum 35 year design service life): All privately owned and maintained stormwater facilities may be constructed of Class No. 3 pipe materials. Private drainage facilities shall mean any stormwater system located outside any public right-of-way or drainage easement, either existing or proposed, as required by any ordinance, rule, regulation, or policy of the City of Indianapolis, or Marion County, or outside of any property owned by the City of

Indianapolis, its departments, Boards, or agents.

Pipe materials accepted by the Department depending upon varying class and service life requirements are summarized below:

402.02
Class 1 Pipe Materials

REQUIRED SERVICE LIFE - 75 YRS

Reinforced concrete pipe
Reinforced concrete horizontal elliptical pipe
Precast reinforced concrete box sections
Fully bituminous coated fully paved corrugated steel pipe:
- 14 gauge aluminum coated Type II or precoated galvanized, 12"-36"
- 12 gauge aluminum coated Type II or precoated galvanized, 42" and larger

Fully bituminous coated, half paved steel helical ribbed pipe (Type IR):
- 14 gauge aluminum coated Type II, 12"-36"
- 12 gauge aluminum coated Type II, 42" and larger

16 gauge aluminum alloy helical ribbed pipe (Type IR)
High density polyethylene pipe (HDPE), 12"-18"
Polyvinyl chloride pipe (PVC), 12"-18"

402.03
Class 2 Pipe Materials

REQUIRED SERVICE LIFE - 50 YRS

Reinforced concrete pipe
Reinforced concrete elliptical pipe
Precast reinforced concrete box sections
Half bituminous coated with paved invert, corrugated steel pipe:
- 14 gauge precoated galvanized steel pipe
- 14 gauge aluminum Coated Type II corrugated steel pipe
- 14 gauge aluminum alloy helical ribbed pipe (Type IR)

14 gauge corrugated aluminum alloy pipe
Steel structural plate pipe, pipe arches and long-spans
Corrugated aluminum alloy box culvert
Corrugated galvanized steel box culvert

Residential driveways and commercial and industrial entrance/exit drives in public R/W:
- Concrete, 12"-30"
- All Class 2 materials, 36" and larger

402.04
Class 3 Pipe Materials

REQUIRED SERVICE LIFE - 35 yrs

Reinforced concrete pipe
Reinforced concrete elliptical pipe
Precast reinforced concrete box sections
16 gauge metal pipe:
- Corrugated steel pipe and pipe arch
- Precoated galvanized steel pipe and pipe arch

Aluminum Coated Type II corrugated steel pipe and pipe arch
Aluminum Coated Type II steel helical ribbed pipe (Type IR)
Corrugated aluminum alloy pipe and pipe arch
Aluminum alloy helical ribbed pipe (Type IR)
Steel structural plate pipe, pipe-arches, and long spans
Corrugated aluminum alloy box culvert
Corrugated galvanized steel box culvert
High density polyethylene pipe (HDPE), 12"-36"
Polyvinyl chloride pipe (PVC), 12"-36"

The above materials are the minimum allowed. If a longer service life is desired, some materials will need to be adjusted.

NOTE: The minimum pipe diameter for all pipe material (Class 1, 2 and 3) shall be 12", except for Class II metal which shall be 15".

Existing drive culverts which have reached the end of their effective service life and are proposed to be extended shall be replaced with those alternate open culvert materials specified by this Chapter.

Precast storm sewer manholes or box inlets will be required between steel pipes of equal size and shape but differing metal types. Section 404 of this Chapter should be referenced for additional requirements relating to placement of precast storm sewer manholes or box inlets.

To satisfy minimum structural requirements, aluminum-alloy pipe, aluminum coated steel pipe, precoated steel pipe, and galvanized steel pipe materials shall confirm to the gauge requirements of Tables 501-6, 501-7, 501-8, and 501-9 within Chapter 500 of this Manual.

The minimum gauge of aluminum-alloy pipe, aluminum coated steel pipe, precoated steel pipe, and galvanized steel pipe shall be the greater of those minimum gauges outlined above, or those minimum gauges required to satisfy structural limitations of the manual.

The structural design of all pipe materials shall be in accordance with the most restrictive of either manufacturer's recommendations, or AASHTO structural design requirements.

402.05
Bituminous Coatings and Pavings

When used with coated pipe of 36 inch and larger diameter, corrugated metal connecting or coupling bands shall be the 2 piece type.

The bituminous material for coating and paving of corrugated metal pipe shall be in full conformance with Section 902.07 of the Indiana Department of Transportation Standard Specifications. When applied to the pipe, the bituminous material shall be free from impurities and the metal shall be free from grease, dust, moisture, or other deleterious material. The following two processes have been adopted from the Indiana Department of Transportation Standard Specifications Section 907.07, and may be used for application of the bituminous material for corrugated metal pipes referenced herein.

1. When the pipe is not preheated, the temperature of the asphalt at the time of immersion shall be 400-degrees F +/-5 degrees F. The duration of the immersion in the asphalt shall be in accordance with the following:

Thickness (inches)	0.052	0.064	0.079	0.109	0.138	0.168
Minimum Immersion Time for First Dip (Minutes)	2.0	2.5	3.0	5.0	6.5	8.0

2. When the pipe is preheated it shall be brought to a temperature of 300-degrees F and the asphalt shall be heated to a temperature of 380-degrees F +/-5-degrees F before the pipe is dipped.

In either of the above processes, the pipe shall be dipped a second time or more if necessary, to give a minimum thickness of 0.05 of an inch.

If paved invert is specified for circular pipe or pipe-arch, the pipe shall be fully or half coated as specified and additional bituminous material applied in the bottom section to form a smooth pavement. Except where the upper edges intersect the corrugations, the pavement shall have a minimum thickness of 1/8 of an inch above the crests of the corrugations. For circular pipe the pavement shall be applied to the lower 1/4 of the circumference. For pipe-arches the pavement shall be applied to the lower 40 percent of the inside periphery.

Polymer precoated corrugated steel pipe shall be in full conformance with AASHTO M245 (or ASTM Designation A762) and AASHTO M246 (or ASTM Designation A742) Grade 10/10.

Bituminous coated and smooth lined galvanized corrugated steel pipe shall be coated as required herein and shall be lined on the inside of the pipe so that a smooth surface will be formed completely filling the corrugations to a minimum thickness of 1/8" above the crests and a maximum of ½" above the crest. The interior lining shall be applied by a centrifugal or other approved method and shall be free from sags and runs. The lining material shall meet the requirements of AASHTO M 190.

Fiber-bonded corrugated metal pipe shall be in full conformance with Section 908.08 of the Indiana Department of Transportation Standard Specifications, latest revision.

SECTION 403 MATERIAL SPECIFICATIONS

403.01
Introduction

This section outlines requirements for the manufacture of storm sewer and open culvert materials according to applicable American Association of State Highway and Transportation Officials (AASHTO) and American Society for Testing and Materials (ASTM) specifications. These material requirements are in part restatements of requirements set forth within the

referenced standard, with noted exceptions. A summarization of information from the referenced ASTM and AASHTO specifications has been included within this section for the convenience of the reader, however, the designer, contractor, and manufacturer must also assume the responsibility of familiarizing themselves with these specifications as they apply to those guidelines set forth herein. The Department will not assume responsibility for noncompliance with the referenced specifications as a result of information not provided by this Manual.

Each storm sewer pipe or open culvert material has been separated into sections which will generally contain the following information: production and material standards; pipe joint replacements; criteria for rejection of damaged materials; and material markings.

403.02
Aluminum-Alloy Structural Plate Pipe, Pipe-Arches, Arches, Long-Spans, and Box Culverts

1. Production and Material Standards

Aluminum-alloy structural plate culverts must be formed from aluminum-alloy structural plate in conformance with ASTM B 790, and ASTM B 746.

The material used in the manufacture of aluminum-alloy structural plates must be as required within ASTM B 209, and secondary structural components must conform to ASTM B 221.

2. Rejection of Damaged Structural Plates

Aluminum-alloy structural plates possessing the following defects may be rejected for installation: dents or bends in the metal; lack of integrity; illegible markings as specified herein on the aluminum sheet; ragged or diagonal sheared edges.

3. Aluminum-Alloy Structural Plate Markings

Each plate shall be identified on the inside with the following information as a minimum: name or trademark of plate manufacturer; name of fabricator, if other than manufacturer; year, and month of manufacture; and ASTM designation.

403.03
Galvanized Structural Plate Pipe, Pipe Arches, Arches, Long-Spans, and Box Culverts

1. Production and Material Standards

Galvanized structural plate culverts must be formed from galvanized structural plate in conformance with ASTM A 761, and ASTM A 796.

Steel sheet used for flat plate shall be galvanized by the hot-dip process according to ASTM A 444. Repair of damaged hot-dip galvanized coatings shall be in conformance with ASTM A 780.

2. Rejection of Damaged Galvanized Structural Plates

Galvanized structural plates possessing the following defects may be rejected for installation: dents or bends in the metal; lack of

integrity; illegible markings as specified herein on the galvanized sheet; ragged or diagonal sheared edges.

3. Galvanized Structural Plate Markings

For galvanized structural plate products, each plate shall be identified on the inside with the following information as a minimum: name of manufacturer; specified zinc-coated thickness; specified coating weight (mass); identification showing heat number and coating lot number (may be omitted if fabricator's records tie the coating lot number to a specific heat number and manufacturer); and ASTM designation.

4. Exterior Field Coatings

Exterior field applied coatings of asphaltic mastic or tar base material shall be required for all galvanized structural plates with less than five (5) feet of cover in conformance with AASHTO M 243.

403.04
Corrugated Metal Pipe and Pipe-Arches

1. Production and Material Standards

Corrugated metal pipe shall be of either riveted lap joint construction (annular corrugations), or be constructed with a continuous lock seam or welded seam from end to end of each length of pipe (helical corrugations).

Aluminum-Alloy Corrugated Pipe shall be fabricated in accordance with ASTM B745. This pipe shall be fabricated from aluminum-alloy sheet and plate as specified within ASTM B 209.

Aluminum Coated Steel Type 2 Corrugated Pipe shall be fabricated as specified within ASTM A 760, except that all pipe and pipe coupling bands shall be formed from aluminum coated steel conforming to ASTM A 819.

Galvanized Steel Pipe shall be manufactured according to those guidelines set forth within ASTM A 760, formed from zinc-coated steel sheet material conforming to ASTM A 444.

2. CMP Joints

External coupling bands conforming to those standards set forth within ASTM B 745 and ASTM A 760 will be accepted for use in the construction of corrugated metal pipe joints. All coupling bands shall be fabricated with annular corrugations to lap an equal portion of each adjoining pipe section, and be of the same gage and coating material as the pipe structure. Each pipe end shall be reformed to have a minimum of two annular corrugations. A tightly closed joint shall be formed in order to create a soiltight seal. The pipe ends shall be matched at the joint such that the difference in diameter between abutting pipes is no more than ½" around the entire pipe circumference. All corrugated metal pipe couplings will be required to be wrapped with a strip of nonwoven

geotextile fabric around the entire pipe diameter to prevent infiltration of bedding and backfill materials. The minimum width of this fabric shall be 1-foot plus the band width, to allow a minimum 6"overlap of each band edge. Rubber "o" ring gaskets may be used in place of geotextile fabric wrap at the corrugated metal pipe joint provided that o-rings are placed on each end corrugation and hugger type bands are used that seat into the second corrugation from the end of the pipe on both pipes at the joint. Bolted connectors are required on the bands such that compression of the o-rings occurs. O-ring diameters shall be per the manufacturer's recommendations.

3. Rejection of Damaged CMP

The completed pipe shall show careful, finished workmanship in all aspects of its production. Pipe which has been damaged may be rejected for any one of the following defects: variation from a straight centerline; elliptical shape in a pipe intended to be round; dents or bends in the metal; metallic coating or bituminous coating or liner which has been bruised, broken, or otherwise damaged; lack of rigidity; illegible markings on the steel sheet; ragged or diagonal sheared edges; uneven laps in riveted or spot welded pipe; loose, unevenly lined, or unevenly spaced rivets; defective spot welds or continuous welds; or loosely formed lockseams.

4. Corrugated Metal Pipe Markings

For corrugated metal pipe products, each corrugated sheet used in the fabrication of annular pipe, and each 2 to 5 feet of coiled sheet used in fabrication of helical pipe must be identified with the following information: name of sheet manufacturer; alloy and temper; specified thickness; ASTM designation; and heat number.

403.05
High Density
Polyethylene Pipe
(HDPE)

1. Production and Material Standards for HDPE

Corrugated High Density Polyethylene Type S (HDPE) pipe shall be manufactured in accordance with AASHTO M 294. Pipe manufactured under this specification shall have a minimum Cell Class of d 324420C in accordance with ASTM D 3350. The flexibility factor of HDPE pipe shall not exceed 0.095.

Ribbed Polyethylene pipe shall be in accordance with ASTM F 894 for the specified sizes, meeting the requirements for RSC 100 or RSC 160. Pipe manufactured under this specification shall have a minimum Cell Class of 334433C in accordance with ASTM D 3350.

Smoothwall Polyethylene pipe shall be in accordance with ASTM F 714 for the specified sizes. Pipe manufactured under this specification shall have a minimum Cell Class of 35434C in accordance with STM D 3350.

All polyethylene pipe and fittings shall be made from high

molecular weight high density polyethylene material meeting the applicable Cell Class requirements. All polyethylene material used in storm sewer pipe manufacture shall be virgin resin.

2. HDPE Joints

High Density Polyethylene pipe shall possess male and female pipe ends which allow the construction of overlapping, gasketed pipe joints, in conformance with the requirements of ASTM D 3212. The gasket material shall conform to all requirements of ASTM F 477. As an alternative, pipe joints utilizing external coupling bands will be accepted, provided the minimum AASHTO requirements for satisfying soil tightness are also achieved.

MANUFACTURED WYES, TEES, ELBOWS, OR ADAPTERS WILL NOT BE ACCEPTED FOR USE IN PLACE OF PRECAST STORM SEWER MANHOLES AND BOX INLETS

PRECAST MANHOLES AND BOX INLETS WILL BE REQUIRED WITHIN HDPE STORM SEWER SYSTEMS AT CHANGES IN GRADE, ALIGNMENT, SIZE, AND PIPE MATERIAL TYPE, AS OUTLINED WITHIN CHAPTER 500 OF THIS MANUAL

3. Rejection of Damaged HDPE

High Density Polyethylene pipe possessing the following defects may be rejected for installation: variations from straight centerline; elliptical shape in pipe intended to be round; illegible markings as required herein; deep or excessive gouges or scratches on the pipe wall; fractures, punctures, or cracks passing through the pipe wall; damaged or cracked ends where such damage would prevent making a satisfactory joint.

4. HDPE Pipe Markings

For high density polyethylene pipe products, each length of pipe shall be clearly marked with the following information as a minimum: manufacturer's name or identification symbol; nominal pipe size; production/extrusion code.

403.06
Polyvinyl Chloride Pipe (PVC)

1. Production and Material Standards

Polyvinyl Chloride (PVC) profile wall gravity flow storm sewer pipe shall be the integral wall bell and spigot type with elastomeric seal joints and smooth inner walls in accordance with AASHTO M 304. A minimum Cell Class of 12454C or 12364C as set forth by ASTM D 1784 shall be required.

Smoothwall PVC pipe shall be in accordance with ASTM F 679 or AASHTO M 278 for the specified sizes, and shall have a minimum Cell Class of 12364C for pipes meeting specification ASTM F 679, or 12454C for pipes meeting specification AASHTO M 278. Cell class properties shall be as set forth by ASTM D 1784.

2. PVC Joints

Flexible, gasketed joints shall be compression type so that when assembled, the gasket inside the bell is compressed radially on the pipe spigot to form a soiltight seal. The assembly of joints shall be in accordance with the pipe manufacturer's recommendations. and ASTM D 3212. The gasket shall conform to the requirements of ASTM F 477. All field-cutting of pipe shall be completed in a neat, trim manner using a hand or power saw.

PRECAST MANHOLES AND/OR BOX INLETS WILL BE REQUIRED WITHIN PVC STORM SEWER SYSTEMS AT ALL CHANGES IN GRADE, ALIGNMENT, SIZE, AND PIPE MATERIAL TYPE, AS OUTLINED WITHIN CHAPTER 500 OF THIS MANUAL MANUFACTURED WYES, TEES, ELBOWS, OR ADAPTERS WILL NOT BE ACCEPTED FOR USE IN PLACE OF MANHOLE OR BOX INLET STRUCTURES.

3. Rejection of Damaged PVC

Polyvinyl Chloride Pipe possessing the following defects may be rejected for installation: variation from straight centerline; elliptical shape in pipe intended to be round; illegible markings as required herein; deep or excessive gouges or scratches of the pipe wall; fractures, punctures, or cracks passing through the pipe wall; damaged or cracked ends where such damage would prevent making a satisfactory joint.

4. PVC Pipe Markings

For polyvinyl chloride pipe products, each length of pipe must be marked with the following information as a minimum: name of manufacturer; tradename or trademark; nominal pipe size; production/extrusion code; material and cell class designation; and ASTM designation.

403.07
Reinforced Concrete
Pipe (RCP)

1. Production and Material Standards

Reinforced concrete pipe shall be Class III, IV, or V in accordance with ASTM C 76, latest edition. A minimum "B" wall thickness will be required. Elliptical reinforced concrete pipe shall be a minimum Class HE-II in full conformance with the requirements of ASTM C 507. Non-reinforced concrete pipe shall meet all requirements of AASHTO M86 for the specified diameter and strength classes.

Elliptical reinforcement shall be permitted only by written approval of the Department. Longitudinal reinforcement shall be continuous and all reinforcement shall have a minimum concrete cover of 3/4-inch.

Upon request by the Department the manufacturer shall furnish certification on the type of cement, aggregate, and steel used in the pipe furnished.

Lift holes will not be allowed for reinforced concrete pipe less than 36-inches in diameter. A maximum of two (2) lift holes may be provided for each section of reinforced concrete pipe 36-inches in diameter and larger. Lift holes must be repaired in a clean, workmanlike manner using a conical shaped precast concrete plug, properly sealed into place using mastic or non-shrink cement grout. Compliance with the Indiana Department of Transportation Standards and Specifications for completion of lift hole repair shall be required.

2. RCP Joints

Concrete pipe shall be furnished with a bell or grove on one end of a unit of pipe, and a spigot or tongue on the adjacent end of the adjoining pipe. All joints shall have a groove on the spigot for placement of a rubber gasket in conformance with ASTM C 443. The gasket shall be a continuous ring which fits snugly into the annular space between the overlapping surfaces of the assembled pipe joint to form a flexible soiltight seal. As an alternative, mastic joints installed in conformance with Manufacturer's recommendations will be accepted by the Department outside of the public right-of-way, however, mastic concrete pipe couplings shall be wrapped with a 1' wide strip of nonwoven geotextile fabric around the entire pipe diameter. Joint mastic material can be lost over time due to the external hydrostatic pressures of groundwater, allowing the migration of backfill materials into the storm sewer system through the open joint.

3. Rejection of Damaged RCP

Individual sections of reinforced concrete pipe may be rejected because of any of the following: fractures or cracks passing through the wall, except for a single end crack that does not exceed the depth of the joint; defects that indicate proportioning, mixing, and molding not in compliance with Section 10.1 of ASTM C 76; surface defects indicating honey-combed or open texture; damaged or cracked ends where such damage would prevent making a satisfactory joint; any continuous crack having a surface width of greater than 0.01 in., and extending for a length of 12 in. or more, regardless of position in the wall of the pipe; visible spacers or longitudinal reinforcement used to position the reinforcing cage shall not be cause for rejection or reinforced concrete pipe sections.

4. Reinforced Concrete Pipe Markings

Each length of reinforced concrete pipe must be marked with the following information as a minimum: date of manufacture; class of pipe and specification designation; size of pipe; tradename or the manufacturer; and plant identification.

403.08
Reinforced Concrete Box Sections

1. Production and Material Standards

Precast reinforced concrete box sections for open storm drainage

culverts must be manufactured from a homogenous concrete mixture conforming to the test and design requirements of ASTM C 789. Box sections must be cured in such a manner that the specified compressive strength of the concrete is achieved in 28-days or less. Compressive strength tests must be conducted in accordance with Section 10 of ASTM C 789 prior to shipment.

Reinforced concrete box sections are divided into three design types, dependent upon varying earth dead load and HS20 and Interstate live loading conditions. Each type of box section must be designated by type, span, rise and design earth cover.

Precast reinforced concrete box sections manufactured in accordance with ASTM C 850 will also be accepted by the Department, under those minimum cover conditions for which this standard is intended to apply.

2. Reinforced Concrete Box Joints

Precast reinforced concrete box sections shall be produced with male and female ends, designed to allow box sections to be laid together in a continuous line. Reinforced concrete box joints shall be sealed using either trowelable grade butyl rubber or asphaltic mastic to form a soiltight seal. Reinforced concrete box joints shall be wrapped around their entire diameter with a 1' wide non-woven geotextile fabric wrap.

3. Steel Reinforcement of Concrete Box Sections

The minimum cover of concrete over the steel reinforcement shall be 1-inch. The inside steel reinforcement shall extend into the male portion of the joint. The outside steel reinforcement shall extend into the female portion of the joint. The clear distance of the end reinforcement steel wires must not be less than ½-inch or more than 2-inches from the end of the box section.

4. Rejection of Damaged Concrete Box Sections

Individual box sections may be rejected because of any of the following: fractures or cracks passing through the wall, except for a single end crack that does not exceed the depth of the joint; honeycombed or open texture that would adversely affect the function of the box sections; the ends of the box sections are not normal to the walls and center line of the box section, within the specified acceptable tolerances.

5. Reinforced Concrete Box Section Markings

For reinforced concrete box sections, each length of a reinforced concrete box must be marked with the following information as a minimum: box section span and rise; ASTM table number; maximum and minimum design earth cover; specification designation; date of manufacture; name of trademark of manufacturer, and; orientation of the top of the structure.

SECTION 404 MANHOLE AND BOX INLET MATERIALS

404.01
Introduction

For the purpose of this Manual, a storm sewer manhole shall mean:

> A reinforced concrete cylinder or reinforced concrete vault as detailed herein, placed below ground at varying points along a storm sewer pipe system, to provide access for maintenance and/or as a point of entry for surface or subsurface water flows. Manholes and precast concrete box inlets may be constructed as catchbasins, in which the outlet pipe is installed 24-inches above the manhole base so that sediment and other debris may be "caught" before entering the storm sewer pipe system.

A storm sewer manhole, or precast concrete box inlet must be installed at the end of each line segment; at all changes in grade, size, materials, and/or alignment of the storm sewer pipe line; at all pipe intersections; and at intervals not greater than those specified herein.

Precast reinforced concrete or prefabricated corrugated metal wyes, tees, and elbows of the same diameter as the storm sewer or culvert pipes will be accepted at horizontal alignment changes within storm drainage systems of 48-inch inside diameter or larger, provided precast or poured-in-place manholes or box inlets are also provided at the required maximum interval of 800 feet.

48-inch vertical precast reinforced concrete or prefabricated corrugated metal tees may be used in place of precast or poured-in-place manholes or box inlets within 48-inch to 144-inch inside diameter reinforced concrete or corrugated metal storm drainage systems.

Corrugated metal tees and risers shall be of the same material type and gauge as the connecting pipe, prefabricated by the pipe manufacturer, possessing continuous welded seams properly recoated with zinc galvanizing compound.

Precast or prefabricated wyes or tees may be utilized for attachment of lateral storm sewer or subsurface tile lines to 48-inch inside diameter or larger drainage systems, however, at least one manhole structure as specified herein must be provided a minimum distance of 250 feet from the wye or tee location.

Catchbasins to be maintained by the City of Indianapolis shall be located within easily accessible dedicated easement or right-of-way areas of sufficient size to facilitate the required maintenance of these structures.

Chapter 100 of this Manual should be referenced for minimum required easement locations and widths.

In order to provide for adequate access to the enclosed storm sewer drainage system, manholes or precast concrete box inlets shall be provided at the following maximum intervals:

Size of Pipe	Maximum Distance
12" thru 18"	500'
21" and larger	800'

Figures 400-01 through 400-09 of the Standard Details should be referenced for an illustration of accepted manhole and precast box inlet construction. The Department will accept the following types of storm sewer structures according to those standards and specifications outlined herein:

404.02
Monolithic (Cast In Place) Storm Sewer Structures

Monolithic pour storm sewer manhole and box inlet structures may be approved on a case by case basis by the Department provided plan specifications showing at a minimum the concrete mix, steel reinforcement details, pipe connections and manhole or box inlet dimensions are submitted and approved prior to construction. Substantial field changes of the approved construction drawings shall be certified by the design consultant, and receive approval of the Department prior to completion of the proposed work. Failure to comply with this specification may necessitate the removal and reconstruction of that portion of the stormwater facility.

404.03
Precast Storm Sewer Manhole Structures

Precast reinforced concrete storm sewer manholes including bases, risers/barrels, cones and flat slabs shall be constructed of either wet or dry cast Class A concrete meeting or exceeding the requirements of ASTM C 478, latest revision.

Precast reinforced concrete storm sewer manholes shall be manufactured, tested and marked in accordance with ASTM C 478, and may be constructed with the base and the first riser section as one complete precast unit, or as a separate base and riser section for diameters 60" and larger. Alternative construction methods for connections to existing storm sewer lines will be approved on a case by case basis by the Department.

Precast reinforced concrete manhole cones shall be the eccentric cone type. Precast reinforced concrete flattop slabs may be used in place of eccentric ones, provided a minimum of 6-inches of soil depth over the concrete slab is provided for establishment of permanent vegetation, in those areas where permanent vegetation is deemed necessary.

Lift holes must be repaired in a clean, workmanlike manner using a conical shaped precast concrete plug, properly sealed into place using mastic or non-shrink cement grout. As an alternative, lift holes may be repaired with 100 percent non-shrink epoxy grout; then smoothed and covered, both inside and out, with a trowelable grade butyl rubber backplaster material to ensure a watertight seal.

Joints between precast storm sewer manhole elements shall be sealed utilizing one of the following alternatives: 1) An approved rubber gasket manufactured and installed in accordance with ASTM C 443, latest

edition, 2) Trowelable grade butyl ribber, or 3) A ½-inch diameter non-asphaltic mastic (Kent Seal or approved equal) conforming to AASHTO M-198 and Federal Specifications SS-521-A.

All precast reinforced concrete storm sewer manholes shall be steam or heat and water mist cured and shall not be installed until at least five (5) days after casting. Exceptions to this "5-day" rule shall be considered by the Department on a case by case basis after written notification and submittal of subject structure test data verifying conformance to the 28-day specified compressive strength.

404.04
Precast Concrete Box Inlets and Catchbasins

Precast concrete box inlets and catchbasins constructed in accordance with Indiana Department of Transportation (INDOT) Standard Specifications will be accepted for use. Inlet and catchbasin Type "A" (see bold type below for additional requirement), Type "B", Type "C", Type "E", Type "J", Type "K", and Type "M" may be used.

Alternative precast or poured-in-place box inlet types will be accepted provided all standard specifications of the Indiana Department of Transportation, City of Indianapolis, Department of Transportation (IDOT), and this Department are fully met or exceeded.

The structural design of precast concrete box inlets and catchbasins shall be in full conformance with the requirements of ASTM C 890.

A MAXIMUM DEPTH OF 4 FEET FROM THE BOTTOM OF CASTING TO THE OUTLET PIPE INVERT SHALL BE ALLOWED FOR TYPE "A" PRECAST BOX INLET STRUCTURES

MORTARED BRICK OR BLOCK WILL NOT BE AN ACCEPTED METHOD OF BOX INLET OR MANHOLE CONSTRUCTION

404.05
Concrete Bases

The concrete base of reinforced concrete monolithic pour or precast manholes shall be of 6 inch minimum thickness for 4 foot diameter structures, and of 8 inch minimum thickness for larger diameter structures, and shall be constructed of Class A concrete having compressive strength of 4000 psi.

The wall and base thickness of precast concrete box inlet structures shall be as specified by the Indiana Department of Transportation Standard Specifications, and must also be constructed of Class A concrete having a minimum compressive strength of 4000 psi.

404.06
Bench Walls

Bench walls shall be shaped and formed for a clean transition with proper hydraulics to allow the smooth conveyance of flows through the manhole or box inlet. The bench wall shall form a defined channel, to a minimum height of 30-percent of the inside diameter of the pipe, constructed at a minimum ½-inch per foot slope to the manhole wall.

For connections to existing storm sewer structures, flow channels shall be shaped, as specified herein, as if it were a new manhole or box inlet structure.

404.07
Manhole Precast Adjusting Rings

Where one (1) solid riser or barrel section cannot be used, final adjustments in elevation of the casting frame and grate for precast manholes shall be accomplished by the use of precast concrete adjusting rings of a minimum nominal thickness of two (2) inches, as shown in Figure 400-10 of the Standard Details, and conforming to ASTM C 478. The maximum number of adjusting rings shall be four (4), with the total height not exceeding 12".

A soiltight seal shall be provided between the precast manhole and riser ring, each adjoining riser ring, and between the riser ring and casting by the use of either two (2) rows of ½ inch extrudable preformed gasket material, non-asphaltic mastic, or trowelable grade butyl rubber, as shown in Figure 400-10 of the Standard Details.

404.08
Precast Concrete Box Inlets and Precast Spacers

For precast concrete box inlets, the adjustment of casting frame and grate shall be accomplished using precast concrete spacers of a minimal nominal thickness of six (6) inches. The maximum number of spacers allowed shall be four (4). A soiltight seal shall be provided between each component of the precast box inlet and precast concrete spacers by use of non-asphaltic mastic, or trowelable grade butyl rubber.

The adjustment of casting elevation for precast concrete box inlets may be accomplished using solid concrete block and mortar to a maximum height of six (6) inches. This type of casting adjustment shall be completed in conformance with the following:

1. Solid precast Class A concrete block of a minimum nominal thickness of two (2) inches in conformance with ASTM C 139 shall be used.

2. No joint shall exceed 3/8 of an inch in width, and as nearly as practicable, adjoining courses shall break joints at ½ unit intervals.

3. Minimum constructed wall thickness shall be six (6) inches.

4. Mortar for laying brick shall be composed of one (1) part masonry cement and two (2) parts mortar sand.

5. Both the inside and outside of the adjustment area shall be plastered to at least ½ of an inch thick using the above mortar mix, or a mixture composed of one (1) part of a combination of Portland cement and hydrated lime and two (2) parts mortar sand. The lime portion of this mix shall not exceed ten (10) percent of the sand. Plaster coats shall be smooth, clean, and watertight.

404.09
Box Inlet and Manhole Dimensions

The maximum inside diameter of pipe allowed to connect to precast box inlet walls shall conform to Table 404-1 below. Table 404-2 outlines those minimum manhole diameters for storm sewer pipes entering or exiting a storm sewer manhole at the given range of angles.

TABLE 404-1: Maximum Pipe Inside Diameters for Precast Box Inlets

Structure Type	*Straight Connection (1)*		*Skew / Corner Connection (2)*	
A	15"		12"	
A Modified	18"		15'	
	Long Wall / Short Wall		*Long Wall / Short Wall*	
B	36"	24"	24"	15"
C	36"	24"	24"	15"
E	24"		15"	
J	27"	18"	18"	15"

FOOTNOTE TO TABLE 404-1:

1. Straight-out connections should not be made to either precast box inlet wall touched by a skew/corner connection unless sufficient box inlet wall area remains on each side of the connecting pipe to ensure structural integrity of the precast box.

2. A maximum of two (2) skew/corner connections will be allowed for each precast box inlet.

TABLE 404-2: Minimum Manhole Diameter's

Pipe Size	*Pipes entering or leaving at a 0-45 degree angle*	*Pipes entering or leaving at a 46-90 degree angle*
12"-21"	48"	48"
24"	48"	60"
27" - 30"	60"	60"
33" - 36"	60"	72"

FOOTNOTE TO TABLE 404-2:

1. Pipe sizes from 12-inches to 24-inches shall be installed as per Figure 400-1.

2. Pipes equal to and greater than 36-inches, up to 48-inches in diameter, shall be installed as per Figure 400-2.

3. Precast reinforced concrete pipes equal to and greater than 48 inches in diameter may be installed as per Figure 400-3.

The number and entrance angle of pipe connections, with consideration given to outside pipe diameter(s), shall be limited to those guidelines established by Tables 404-1 and 404-2 to ensure maintenance of the structural integrity of the manhole or box structure. If at any time the

structural integrity of the manhole or box inlet cannot be maintained, a cast-in-place structure will be required. Shop drawings for cast-in-place structures showing concrete mix, steel reinforcement, and section dimensions shall be submitted to the Department for review and approval prior to construction.

MANHOLE STEPS SHALL BE PROVIDED IN ALL STORM SEWER STRUCTURES 48-INCHES IN DIAMETER OR LARGER AS REQUIRED TO ALLOW ADEQUATE ACCESS FOR COMPLETION OF INSPECTIONS, CLEANING AND REPAIRS

THE MAXIMUM DISTANCE FROM GRADE TO THE FIRST MANHOLE STEP SHALL BE 24"; THE MAXIMUM DISTANCE BETWEEN STEPS SHALL BE 16", AND THE MAXIMUM DISTANCE FROM THE LAST STEP TO THE STRUCTURE BENCHWALL SHALL BE 24"

Manhole steps shall be made from a steel reinforcing rod encapsulated in a copolymer polypropylene resin. The manhole steps shall equal or exceed OSHA requirements. Manhole steps, manufactured by M.A. Industries, Inc., PS-1-PF, Clay & Bailey Mfg. Co., or equal are acceptable.

404.10
Pipe Connections

Inlet and outlet pipes shall extend through the box inlet or manhole walls a sufficient distance to allow for placement of grouting material around the pipe diameter both inside and outside of the structure wall, preventing leakage around the pipes outer surface. Inlet and outlet pipes shall not extend through the inlet or manhole wall to such a degree that flow is obstructed.

Holes for connection of storm sewer pipes shall be preformed by the manufacturer, or field cut or drilled. Preformed holes shall be the method preferred by the Department. At no time shall the pipe hole exceed the outer pipe diameter plus six (6)-inches (O.D. + 6"), to ensure a proper connection is achieved. Should the contractor elect to use manhole or box inlet structures with preformed thin wall "knock-outs", the balance of the "knock-out" area not occupied by the pipe connection and all remaining unused "knock-outs" shall be filled with 4000 psi Class A concrete to a finished wall thickness not less than that required by these standards. The use of preformed "knock-outs" shall not relieve the manufacturer from compliance with the reinforcement, dimension, and strength requirements specified herein.

The annular space between the pipe and the precast manhole or box inlet wall shall be filled inside and outside with a grout mixture composed of 2 parts of No. 23 fine aggregate and one part of Portland cement.

As an alternative, pipe connections to manholes utilizing an approved rubber gasket manufactured and installed in accordance with ASTM C 923 will be accepted by the Department.

404.11
Subsurface Tile
Connections and Stubs

Unless otherwise approved, perforated subsurface drainage tiles, footer drains, or sump pump lines shall attach at a storm sewer manhole or box inlet structure. At these connections, precast or drilled holes shall be provided to a maximum of 2-inches larger than O.D. of the connecting

line. These connections shall be made in a clean workmanlike manner, and properly sealed using either an approved mortar mix, non-asphaltic mastic, or trowelable butyl rubber plaster.

Where connections cannot be made to a manhole or box inlet structure, blind "T" connections to storm sewer pipe structures will be allowed on a case by case basis by the Department, provided a cut or core-drilled connection hole, with a minimum 6-inch inside diameter cleanout connection, is also provided.

To relieve hydraulic groundwater pressure from around the enclosed storm sewer system, the Department may require provision of perforated subsurface drainage tile "T" stubs, with filter fabric wrap, to be installed with manhole and precast box inlet structures greater than four (4) feet in depth. These subsurface drainage lines shall be an approved subsurface drainage tile material, with end caps, and shall extend a minimum of 10-feet in each direction from the manhole structure, placed just above the bench wall, as illustrated within Figures 400-01, and 400-02 of the Standard Details.

404.12
Rejection of Damaged Box Inlet and Manholes

Precast reinforced concrete manholes, risers and tops, and precast box inlets which possess any of the following defects shall be subject to rejection: fractures or cracks passing through the shell, except for a single end crack that does not exceed the depth of the joint; defects that indicate imperfect proportioning, mixing and molding; surface defects indicating honeycombed or open texture; damaged ends, where such damage would prevent making a satisfactory joint; the internal diameter of the manhole section shall not vary more than one (1) percent from the nominal diameter; not clearly marked date of manufacture, tradename, size designation part number, and ASTM number; having a deviation more than 1/4 inch from the straight edge at any point across the top of the manhole cone section or riser ring; having any visible steel bars along the inside or outside surface of the manhole except for reinforcement stirrups or spacers used to position the cage during manufacture, and reinforcement bars visible at the manhole structure end, provided these reinforcement bar ends are properly grouted in conformance with applicable ASTM specifications.

SECTION 405 CASTINGS, FRAMES AND COVERS

405.01
Introduction

The design engineer will be required to determine the feasibility of use and placement of each casting type, based upon required square footage of open area needed for proper conveyance of estimated stormwater flow.

405.02
Manholes

Storm sewer manhole covers shall be a solid lid casting as detailed within Figure 400-11 of the Standard Details. The words "Storm Sewer" and "City of Indianapolis" must be imprinted onto solid lid covers for those manholes placed within the public right-of-way or permanent drainage easements.

405.03
Slotted Drains

Slotted drains shall be manufactured from helically corrugated aluminum coated steel Type 2 pipe (minimum metal thickness of 0.064"), fully

encased by 4000 psi compressive strength Class A concrete. The grate assembly shall be made of three-sixteenths inch (3/16") structural steel suitably welded to the pipe and galvanized after assembly in accordance with AASHTO M 111. The grate shall be one and three-quarters inches (1 3/4") wide and either two and one-half inches (2 ½") or six inches (6") deep. Slotted drains shall also meet the applicable Indiana Department of Transportation (INDOT) Standard Specifications, and be installed in conformance with all manufacturer's recommendations.

405.04
Rejection of Castings

All castings shall also conform to the following requirements:

* Casting shall be of uniform quality, free from blow holes, porosity, hard spots, shrinkage, distortion or other defects. They shall be smooth and well-cleaned by shot blasting or other approved method.

* All castings shall be manufactured true to pattern; component parts shall fit together in a satisfactory manner. Round frames and covers shall be of non-rocking design or shall have machined horizontal bearing surfaces to prevent rocking and rattling under traffic. All Castings shall be fully interchangeable.

* All weights shall not deviate from the tolerances permitted by ASTM standards, as specified within ASTM A 48, "Standard Specifications for Gray Iron Castings."

* All castings shall be manufactured in accordance with ASTM A 48 Class 35 B, and shall have a minimum tensile strength of 35,000 psi.

* Storm sewer manhole covers shall have the words "storm sewer" cast in recessed letters two (2) inches in height.

CURB INLET CASTINGS WHICH POSSESS OPEN BACKS OR HAVE GRATE BARS PARALLEL TO TRAFFIC FLOW (ARE NOT "BICYCLE SAFE") WILL NOT BE ACCEPTED BY THE DEPARTMENT

SECTION 406 SUBSURFACE TILES

406.01
Introduction

Subsurface tile as specified herein may be used to convey soil water collected in sump pits and footer drains to an acceptable drainage outlet, provided these drainage tile are properly sized to accept these flows, and connections to the existing stormwater facility are made as specified herein.

Subsurface tiles will not be considered adequate to accept other types of surface water flows, intended to be collected by an enclosed storm sewer system. Under those instances where surface inlets are to be provided within a subsurface tile line, the minimum requirements for storm sewer size and pipe material outlined within Section 401 of this Chapter shall apply.

406.02

The following requirements shall be adhered to as a part of all subsurface

General Requirements

tile installations:

1. Tile Perforations

The water inlet area of perforated subsurface drainage tiles shall be at least one (1) square inch per foot of conduit length. Round perforations shall not exceed 3/16-inch in diameter, except where fabric filters or other filtration protection is provided. Slotted perforations shall not exceed 1/8-inch in width.

2. Joints and Fittings

Subsurface tile shall be joined using external coupling bands, bell and spigot joints, or solvent cement joints per both the referenced ASTM Standards and the manufacturer's recommendations. Pre-formed wyes, tees, elbows and other special pipe fittings will be accepted for use provided they are manufactured and installed per ASTM and manufacturer requirements.

Solvent cement joints of polyvinyl chloride sewer pipe and fittings shall be installed using those methods and materials outlined within ASTM D 2564, ASTM F 493, and ASTM F 656. The recommended procedure for installation of solvent cement joints within Appendix X1 of ASTM F 493 shall be followed.

SUBSURFACE TILE SYSTEMS MAY BE REQUIRED TO BE PROVIDED WITH A "Y" CLEANOUT CONNECTOR AT A MINIMUM INTERVAL OF 400 FEET

3. Tile Markings

All polyvinyl chloride and polyethylene subsurface drainage tile specified herein shall be marked per the respective ASTM Standards.

4. Material Certification

The Department shall reserve the right to require the Contractor to provide written certification from the manufacturer that each subsurface tile material proposed to be used as required herein has been sampled, tested, and inspected in accordance with the provisions of each ASTM Specification.

406.03
Accepted Materials

The Department will accept those materials listed within Table 406-1 below, which meet or exceed the minimum requirements and ASTM specifications set forth herein, for installation of subsurface drainage tiles.

TABLE 406-1: Subsurface Drain Tile Materials

Material Type	ASTM Designation(1)
Corrugated Polyethylene tubing and fittings, 3-6 inch(2)	ASTM F 405

Corrugated Polyethylene tubing and fittings, 8-24 inch(2)	ASTM F 667
Corrugated Polyvinyl Chloride (PVC) tubing and compatible fittings	ASTM F 800
Polyvinyl Chloride (PVC) corrugated sewer pipe with smooth interior walls and fittings, 4-18 inch	ASTM F 949
Polyvinyl Chloride (PVC) sewer pipe and fittings	ASTM D 2729
Polyvinyl Chloride (PVC) pipe	ASTM D 3033 ASTM D 3034

NOTE:

1. The ASTM Specifications referenced shall mean the latest revision. Copies of these specifications can be obtained from the American Society for Testing and Materials, 1916 Race Street, Philadelphia, PA 19103.

2. Polyethylene pipe under this specification may be provided as a corrugated single wall, or double walled with a corrugated outer wall and smooth inner wall.

DOUBLE WALLED CORRUGATED POLYETHYLENE TILE MANUFACTURED UNDER SPECIFICATION ASTM F 667 AND PVC TILE MANUFACTURED UNDER SPECIFICATION ASTM E 949, ASTM D 3033, AND ASTM D 3034 WILL BE REQUIRED FOR INSTALLATION OF SUBSURFACE DRAINAGE TILE WITH LESS THAN 18" OF EARTH OR EQUIVALENT COVER

406.04
Limited Cover Installations

Installation of subsurface tiles shall be in accordance with the requirements of this Manual, and those guidelines set forth within ASTM F 449, "Subsurface Installation of Corrugated Thermoplastic Tubing for Agricultural Drainage or Water Table Control." Subsurface tiles shall be properly bedded with a #8 gravel envelope. Except as specified herein, a minimum depth of 12-inches (1 foot) of earth or equivalent cover above the top of the tile will be required. Chapter 500 of this Manual should be referenced for further information relating to the installation of subsurface tiles.

SECTION 407 PIPE END TREATMENTS

407.01
Introduction

Protection of storm sewer pipe and open culvert ends is required to ensure maintenance of free-flowing inlets and outflows, to prevent flotation of the structure, and to protect against a migration of backfill materials. End treatments will include, but may not be limited to, stabilization of surrounding embankments, and provisions for end sections, footing supports, and end anchors.

407.02
Embankment
Protection

Embankment slopes surrounding storm sewer pipe and open culvert ends shall be graded and stabilized with permanent vegetation cover at no greater than a 3 (horizontal) to 1 (vertical) slope. Seeding specifications, and additional erosion control measures necessary to facilitate the establishment of permanent vegetation as specified within Chapter 600 of this Manual will be required.

Embankment slopes steeper than 3 (horizontal) and 1 (vertical) may be stabilized with hand placed rock rip-rap of sufficient size to withstand the anticipated stream flow velocities, with provision of granular bedding or approved geotextile as subgrade support. Alternative embankment stabilization methods such as reinforced concrete wingwalls and slope walls will be approved on a case by case basis by the Department.

407.03
End Protection

The following end protection will be required by the Department for each pipe material type specified:

1. Reinforced Concrete

End sections for concrete pipe shall be precast concrete, with end footing support. The formulation of the concrete mix, Portland cement, aggregates, and reinforcing steel used in the construction of reinforced concrete end sections, headwalls, and slope walls shall be in full conformance with the requirements of ASTM C 76.

The pipe hole of precast concrete end sections shall be formed with a groove or tongue, for receipt of the reinforced concrete pipe end. Figure 400-12 of the Standard Details should be referenced for an illustration of standard dimensions of precast concrete end sections.

2. Plastic (PVC and HDPE)

The open ends of high density polyethylene and polyvinyl chloride storm sewer pipes shall be protected using flared, prefabricated steel end sections. The connecting bands of steel end sections shall be formed to fit the standard outside diameter of the plastic pipe, so that a tight connection is achieved.

Poured-in-place, reinforced concrete slope-walls may be utilized as an equal alternative to flared, prefabricated steel end sections. The formulation of the concrete mix, Portland cement, aggregates, and reinforcing steel used in the construction of reinforced concrete slope walls shall be in full conformance with the requirements of ASTM C 76. This method of thermoplastic pipe end protection will be preferred by the Department.

3. Corrugated Metal (CMP)

The open ends of corrugated metal pipes shall be protected using flared, prefabricated steel end sections. The connecting bands of steel end sections must be formed to fit the standard outside diameter of the corrugated metal pipe. so that a tight connection is achieved. Tables 407-1, 407-2, and 407-3 should be referenced for an illustration of the standard dimensions of steel

end sections.

EIGHTEEN (18) INCH TOE PLATE EXTENSIONS WILL BE REQUIRED FOR ALL METAL END SECTIONS

4. Box Sections and Structural Plate Arches

Reinforced concrete box sections and structural plate arch culverts shall be provided with sufficient reinforced concrete end anchors, footing supports, headwalls, and/or embankment protection as required to ensure stability of the surrounding embankments, and maintenance of the structural integrity and hydraulic performance of the culvert structure.

USE OF POURED-IN-PLACE REINFORCED CONCRETE HEADWALLS AS END TREATMENT IN THE RIGHT-OF-WAY WILL BE ALLOWED ONLY AS APPROVED ON A CASE BY CASE BASIS

TABLE 407-1: Dimensions of Galvanized Steel End Sections for Pipe-Arch, 3" x 1" and 5" x 1" corrugations. (Figure 400-13)

TABLE 407-1 HAS BEEN DELETED FROM THE STANDARDS

TABLE 407-2: Dimensions of Galvanized Steel End Sections for Round Pipe, 2 2/3" x ½", 7 ½" x 3/4" x 3/4", 3" x 1" and 5" x 1" corrugations. (Figure 400-13)

Pipe-Arch. in.		Metal Thickness in.	Dimensions, in.					Approximate Slope	Body
Span	Rise		A ± 1 in.	B (max.)	H ± 1 in.	L ± 1 ½ in.	W ± 2 in.		
17	13	0.064	7	9	6	19	30	2½	1 Pc.
21	15	0.064	7	10	6	23	36	2½	1 Pc.
24	18	0.064	8	12	6	28	42	2½	1 Pc.
28	20	0.064	9	14	6	32	48	2½	1 Pc.
35	24	0.079	10	16	6	39	60	2½	1 Pc.
42	29	0.079	12	18	8	46	75	2½	1 Pc.
49	33	0.109	13	21	9	53	85	2½	2 Pc.
57	38	0.109	18	26	12	63	90	2½	2 Pc.
64	43	0.109	18	30	12	70	102	2½	2 Pc.
71	47	0.109	18	33	12	77	114	2½	3 Pc.

TABLE 407-3: Dimensions of Galvanized Steel End Sections for Pipe-Arch, 2 2/3" x ½", and 7 ½" x 3/4" x 3/4" corrugations. (Figure 400-13)

Pipe Diameter in.	Metal Thickness in.	Dimensions, in.					Approximate Slope	Body
		A ± 1 in.	B (max.)	H ± 1 in.	L ± 1 ½ in.	W ± 2 in.		
12	0.064	6	6	6	21	24	2½	1 Pc.
15	0.064	7	8	6	26	30	2½	1 Pc.
18	0.064	8	10	6	31	36	2½	1 Pc.
21	0.064	9	12	6	36	42	2½	1 Pc.
24	0.064	10	13	6	41	48	2½	1 Pc.
30	0.079	12	16	8	51	60	2½	1 Pc.
36	0.079	14	19	9	60	72	2½	2 Pc.
42	0.109	16	22	11	69	84	2½	2 Pc.
48	0.109	18	27	12	78	90	2¼	2 Pc.
54	0.109	18	30	12	84	102	2	2 Pc.
60	0.109	18	33	12	87	114	1¾	3 Pc.

NOTE:

1. All 3-piece bodies to have 0.109-in. sides and 0.138-in. center panels. Multiple panel bodies to have lap seams which are to be tightly joined by galvanized rivets or bolts.

2. For 60 in. sizes, reinforced edges to be supplemented with galvanized stiffener angles. The angles to be attached by galvanized nuts and bolts.

3. Galvanized toe plate shall be required, and shall be the same thickness as the End Section.

4. Pipes larger than 60" or equivalent diameter shall be provided with pipe end anchors as specified herein.

407.04
Culvert End Anchors and Footing Supports

For pipes larger than 60", the applicable INDOT standard details and specifications shall be used for pipe end anchors. The formulation of the concrete mix,Portland cement, aggregates, and reinforcing steel used in the construction of reinforced concrete end sections, headwalls, and slope walls shall be in full conformance with the requirements of ASTM C 76. Eighteen inch (18") toe-plate extensions will be required for all galvanized steel end sections.

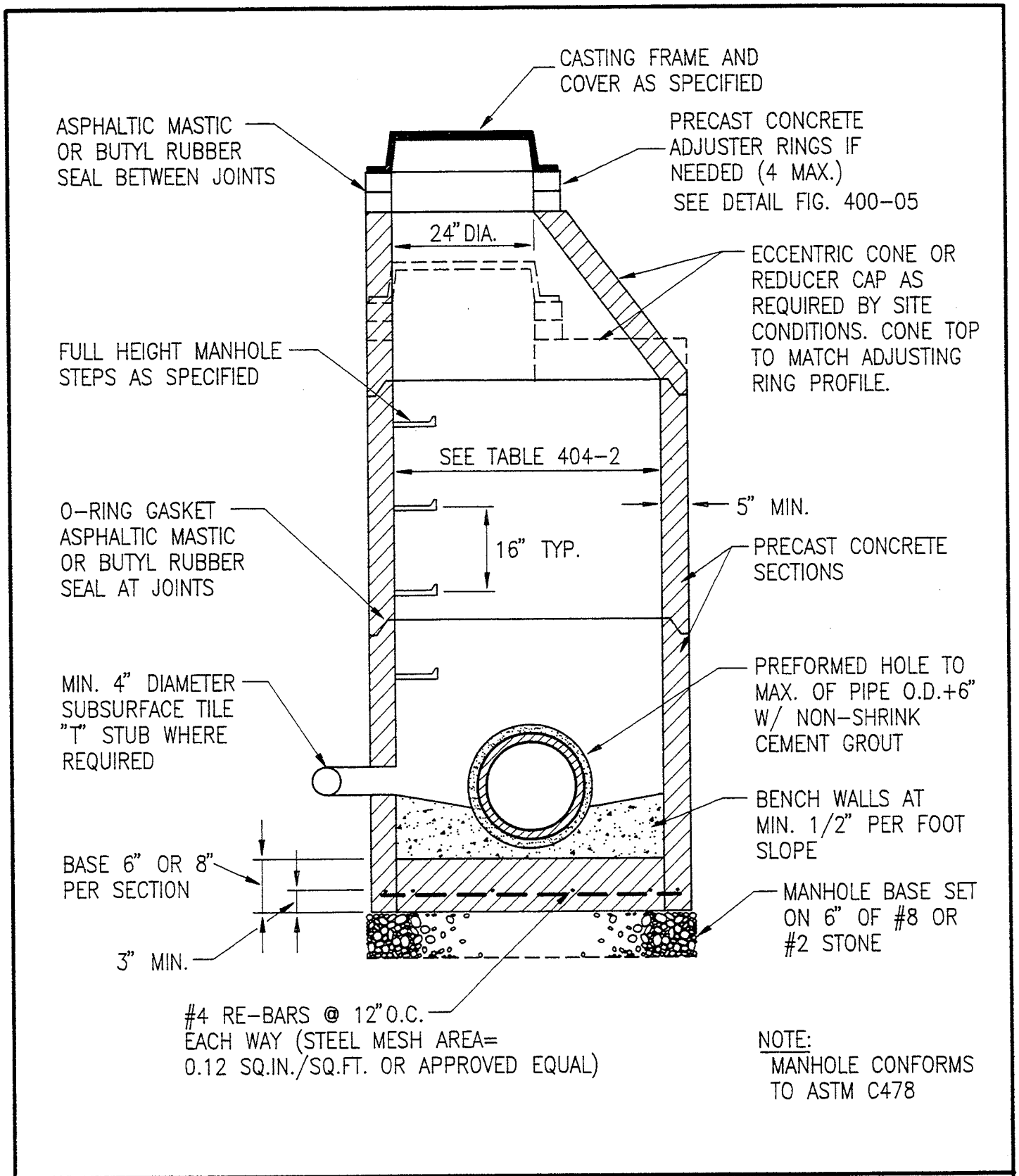

STANDARD MANHOLE FOR PIPE SIZES 12" thru 24"

Figure 400-01

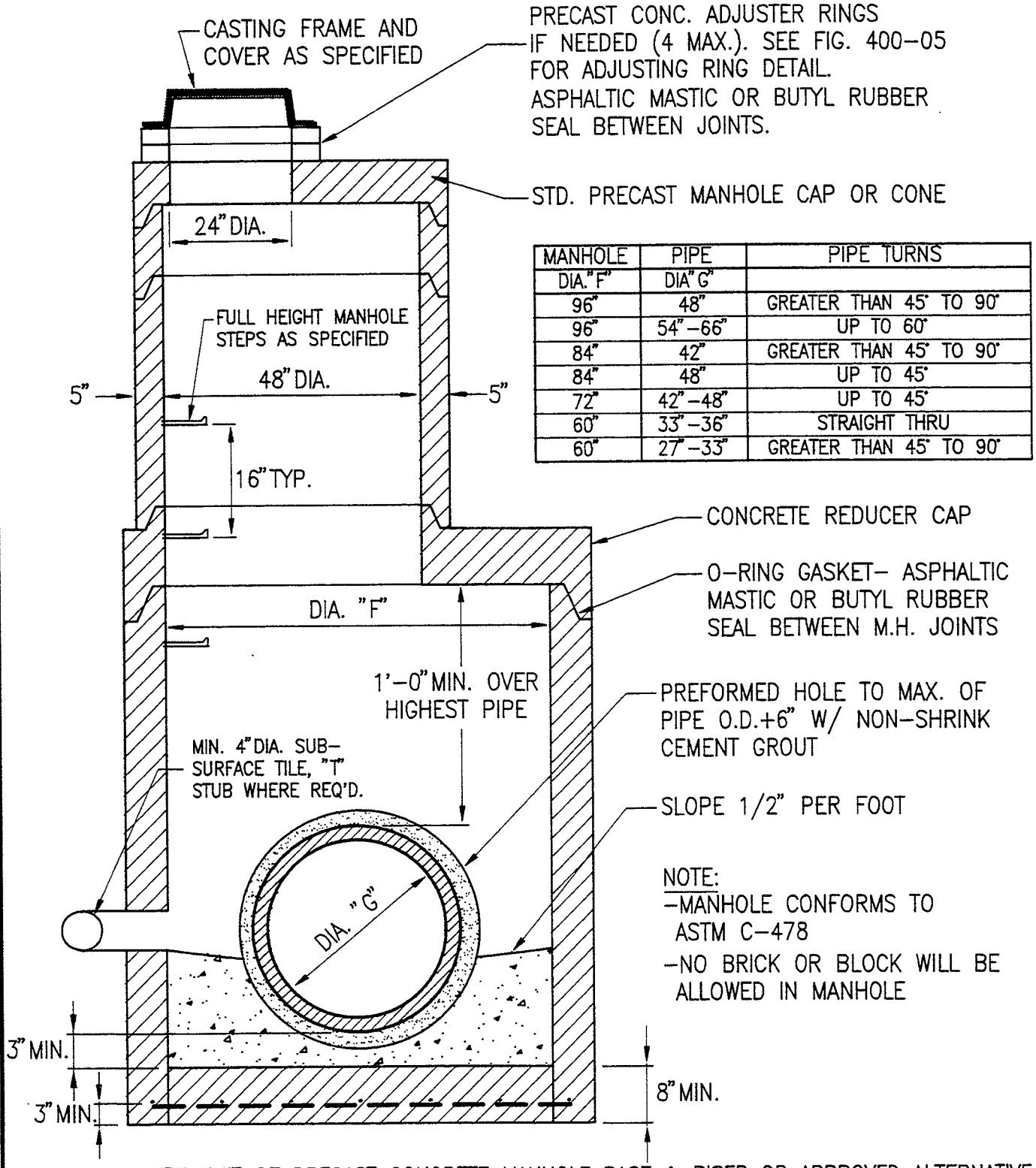

MANHOLE DIA."F"	PIPE DIA"G"	PIPE TURNS
96"	48"	GREATER THAN 45° TO 90°
96"	54"-66"	UP TO 60°
84"	42"	GREATER THAN 45° TO 90°
84"	48"	UP TO 45°
72"	42"-48"	UP TO 45°
60"	33"-36"	STRAIGHT THRU
60"	27"-33"	GREATER THAN 45° TO 90°

ONE COMPLETE UNIT OF PRECAST CONCRETE MANHOLE BASE & RISER OR APPROVED ALTERNATIVE. SEPARATE BASE & RISER SECTION IS OPTIONAL.

MANHOLE BASE, RISER & REDUCER CAP FOR PIPES 27" thru 48"

Figure 400-02

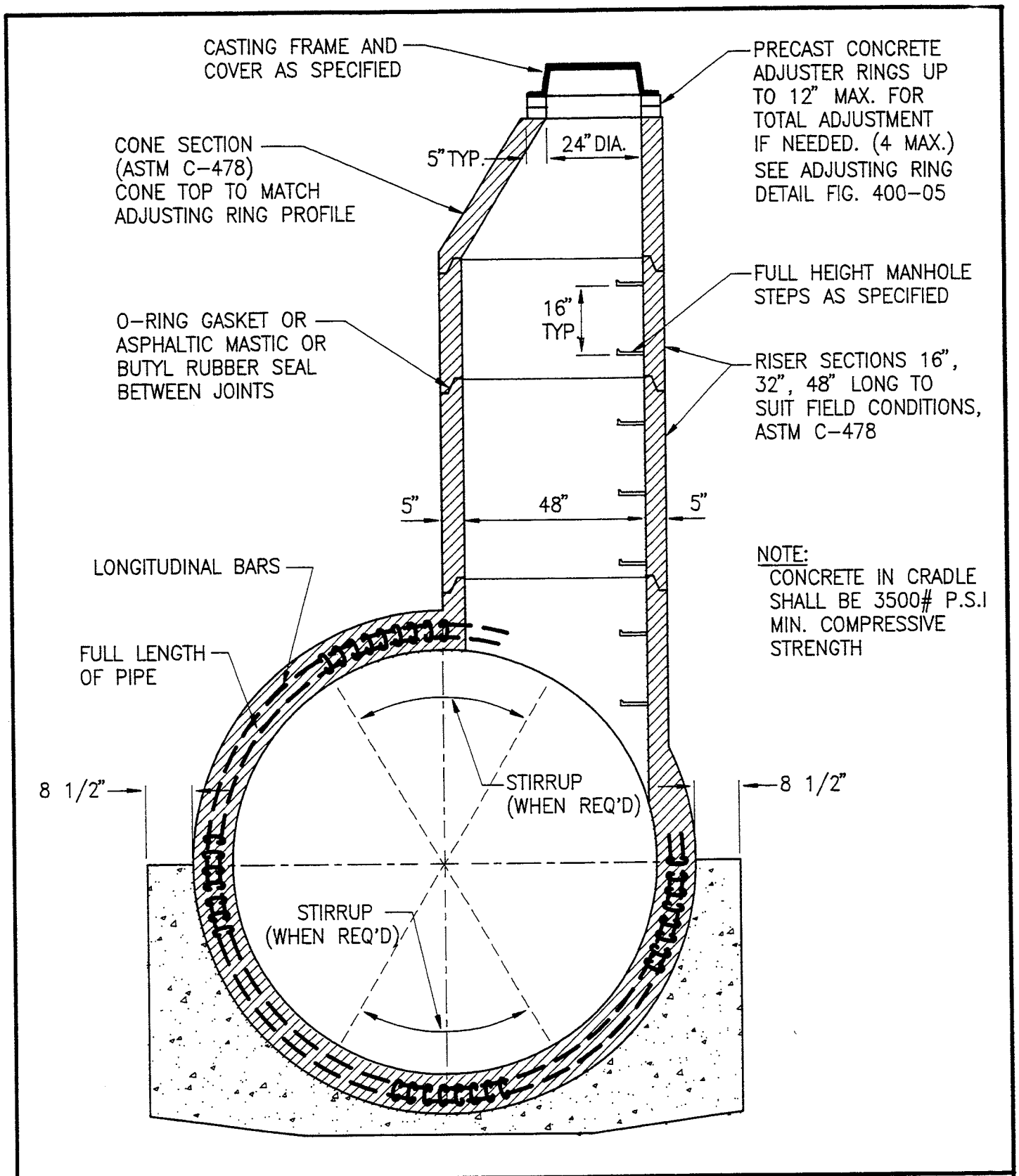

SPECIAL MANHOLE- 54" thru 144" SEWERS

MEETING CLASS III, IV OR V ASTM SPECS.

Figure 400-03

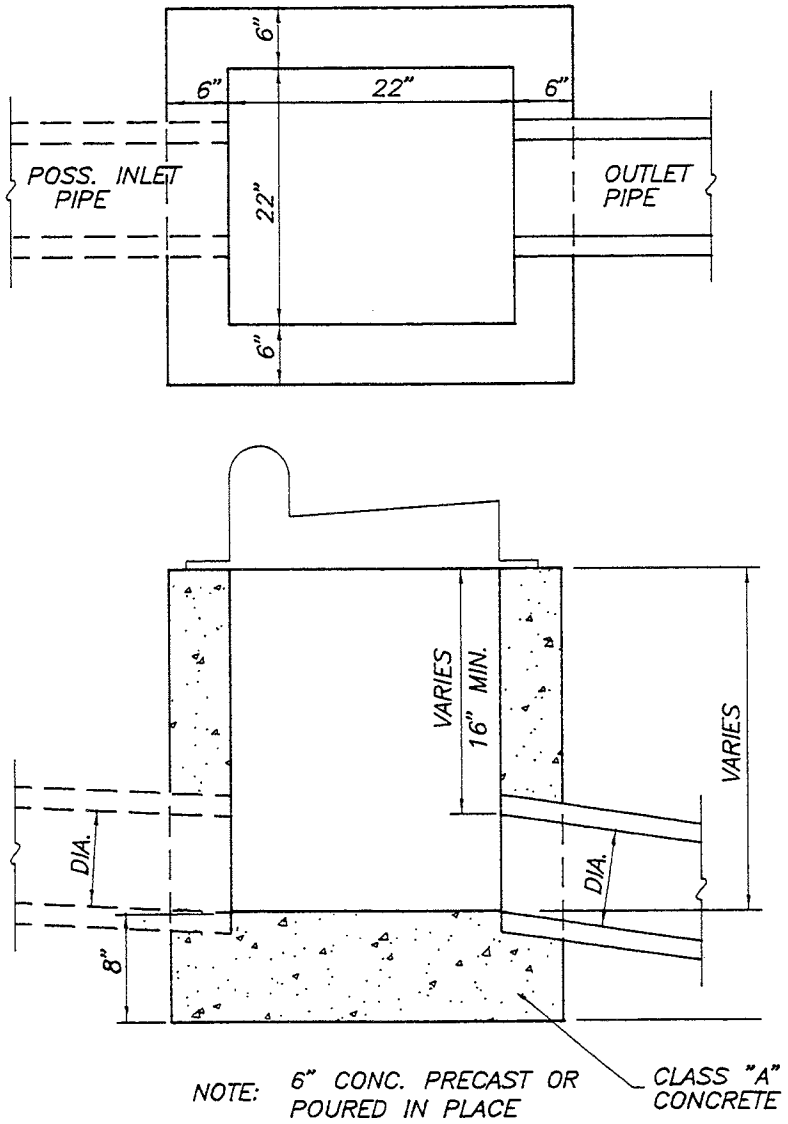

NO SCALE

INLET TYPE "A" (TYPICAL)

(12" TO 15" PIPES)

Figure 400-04

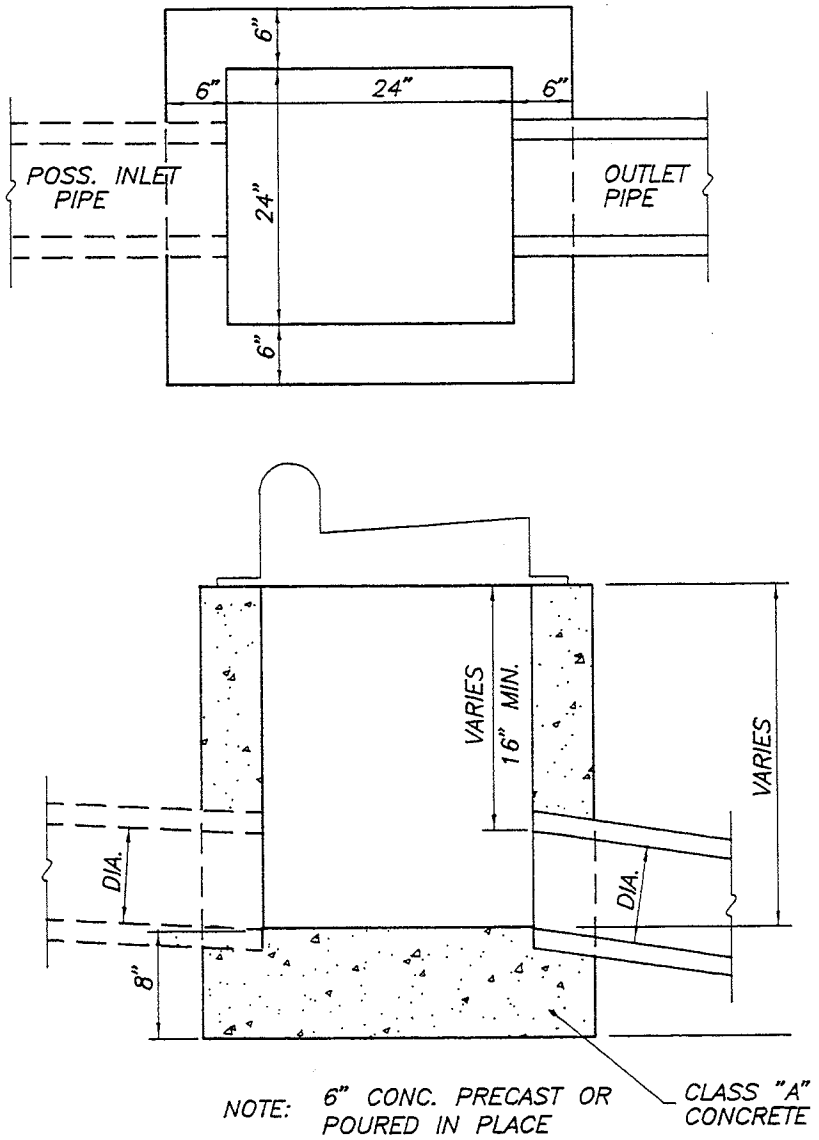

NO SCALE

INLET TYPE "A" (MODIFIED)

(12" TO 18" PIPES)

Figure 400–05

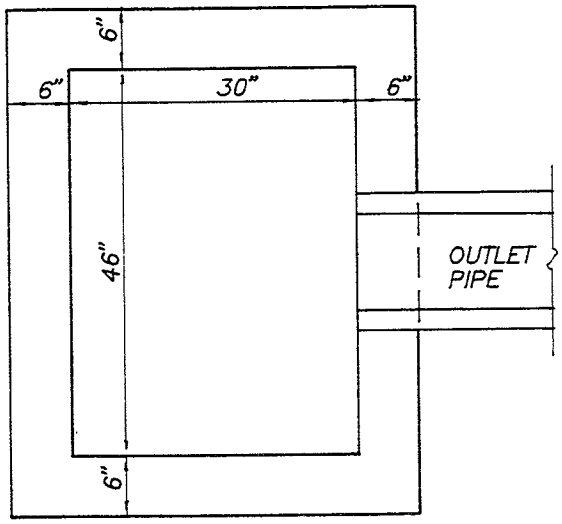

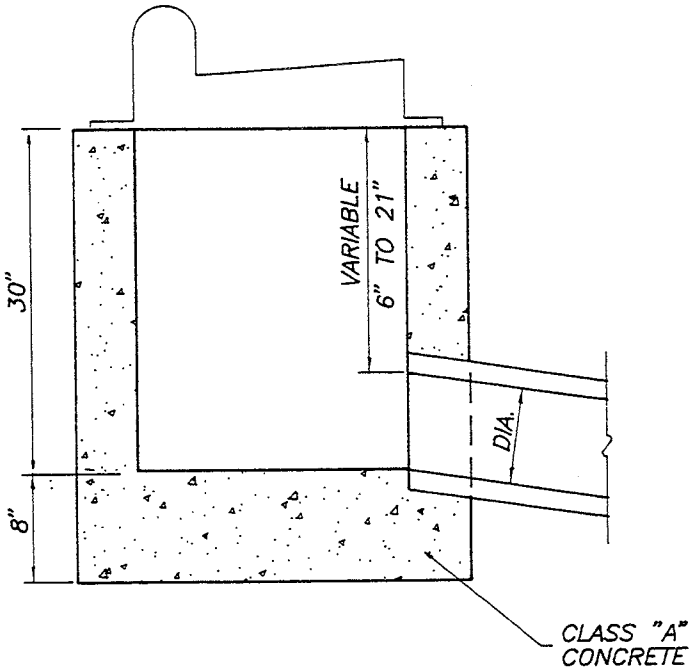

NOTE: 6" CONC. PRECAST OR POURED IN PLACE

NO SCALE

INLET TYPE "B"

Figure 400–06

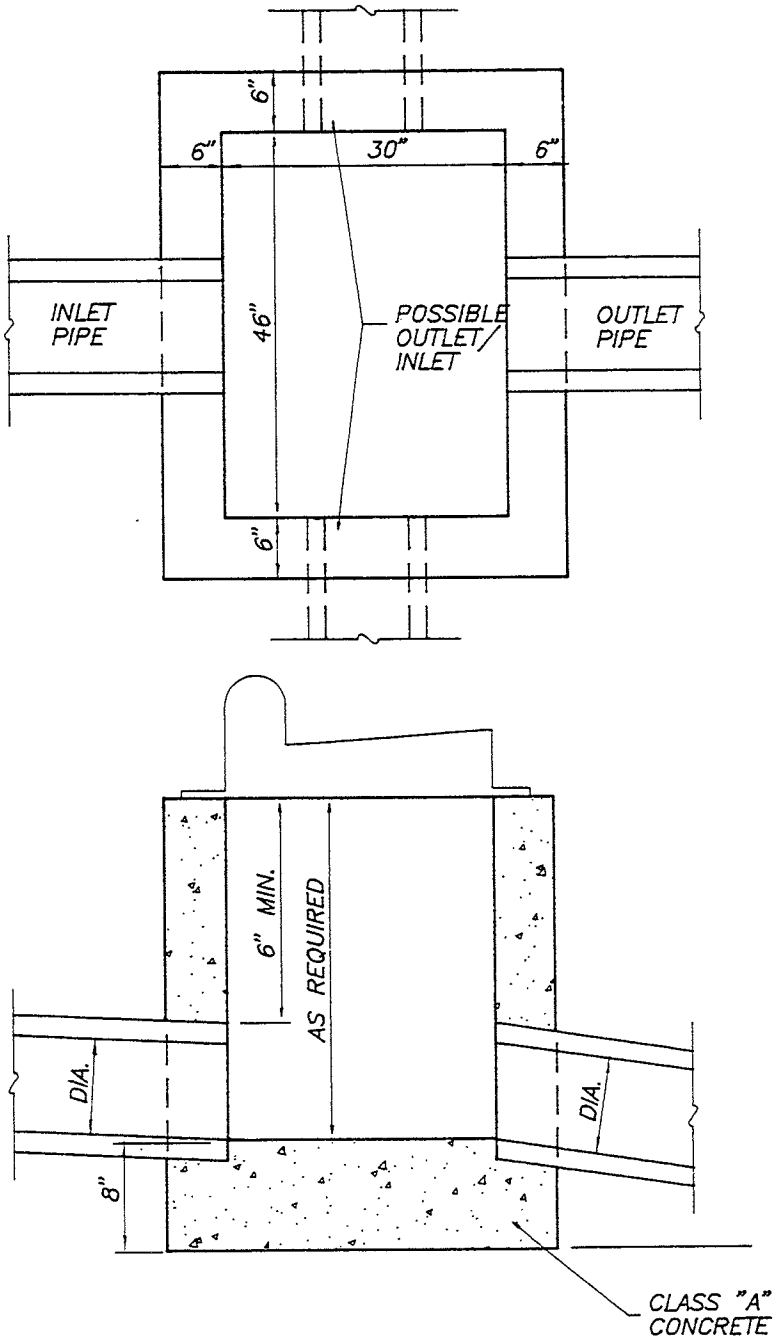

NOTE: 6" CONC. PRECAST OR POURED IN PLACE

NO SCALE

INLET TYPE "C"

Figure 400-07

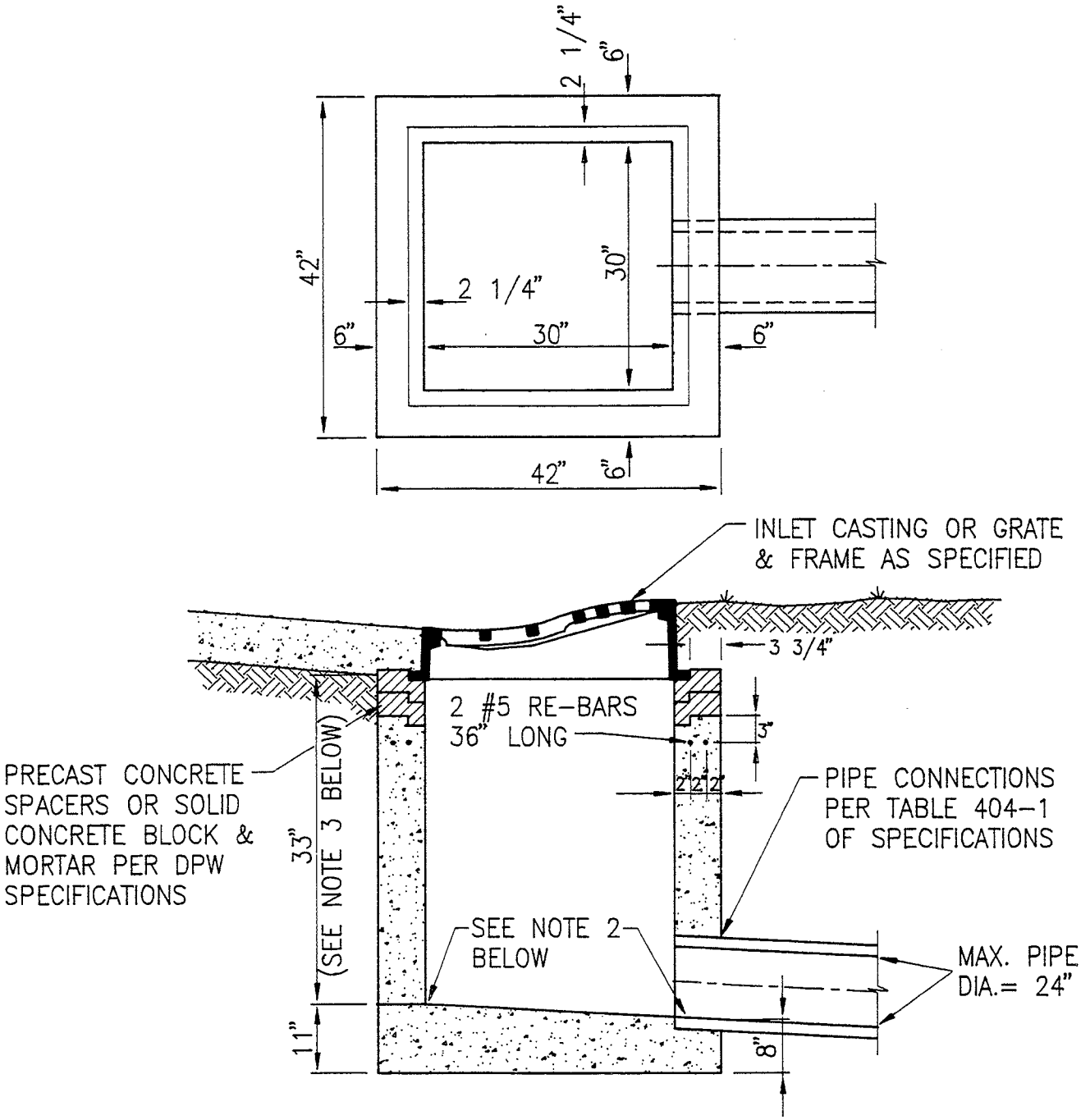

NOTES:

1. DIMENSIONS SHOWN IN CONFORMANCE WITH INDIANA DEPT.OF TRANSPORTATION (INDOT) SPECIFICATIONS.
2. POURED BENCHWALL AND PIPE CONNECTION VARY WITH BOX TYPE SPECIFIED.
3. HEIGHT DIMENSION MAY VARY AS REQUIRED BY SITE CONDITIONS.

PRECAST CONCRETE BOX INLET TYPE E

WITH ROLL CURB CASTING AND FRAME

Figure 400-08

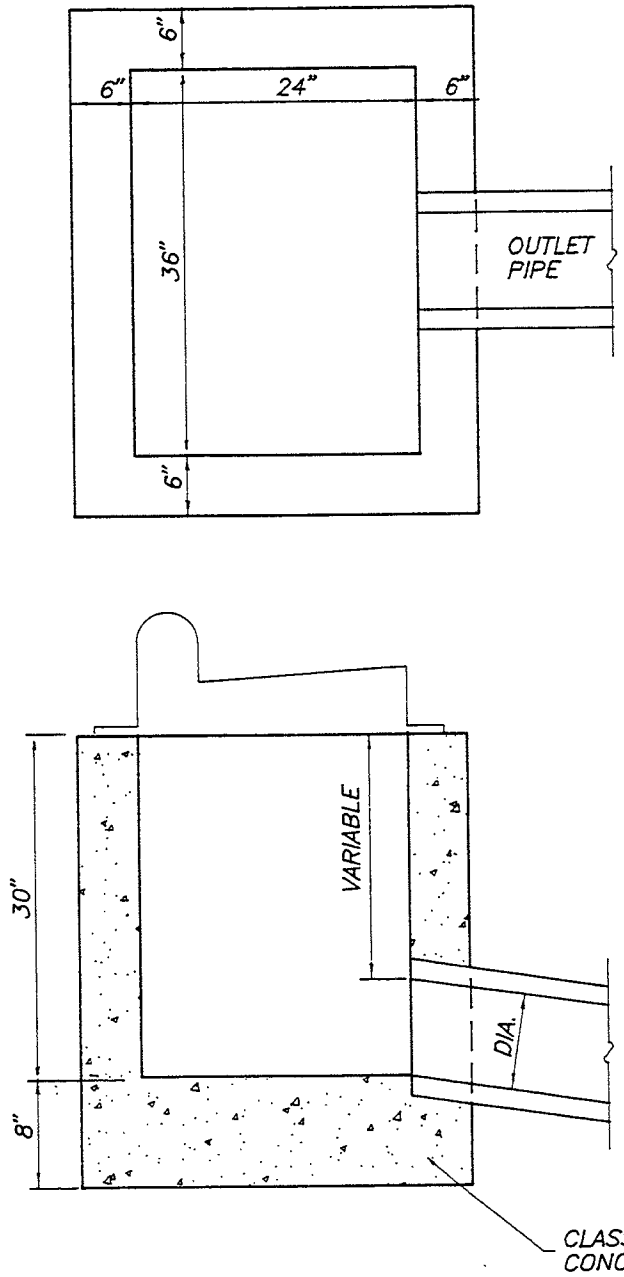

NOTE: 6" CONC. PRECAST OR POURED IN PLACE

NO SCALE

INLET TYPE "J"

Figure 400–09

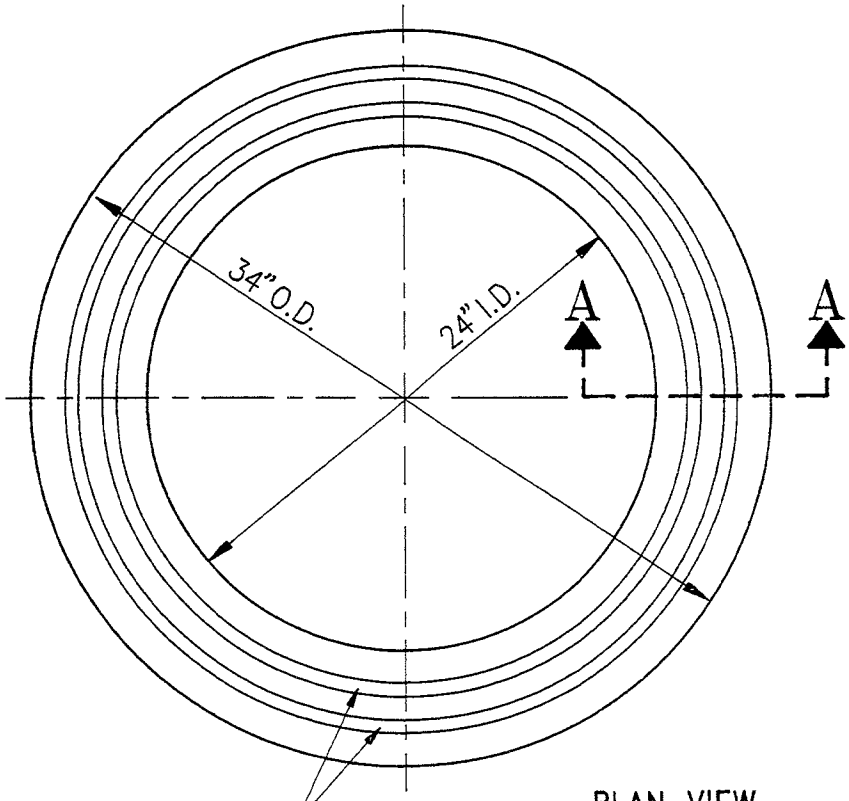

PLAN VIEW

PLACE 1/2" DIAMETER EXTRUDABLE PREFORMED GASKET MATERIAL IN EACH KEYWAY (SEE DETAIL). NON-ASPHALTIC MASTIC OR BUTYL RUBBER PLASTER ACCEPTED ALTERNATIVE.

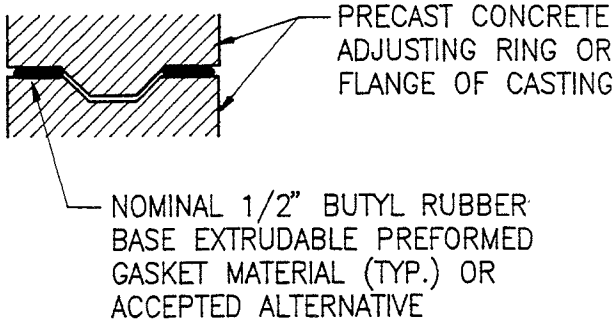

GASKET DETAIL

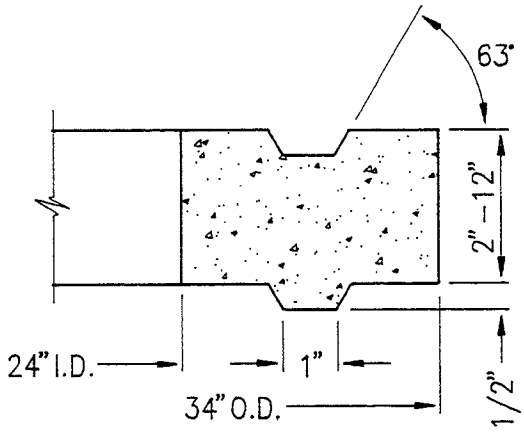

SECTION "A-A"

PRECAST CONCRETE ADJUSTING RING DETAIL

Figure 400-10

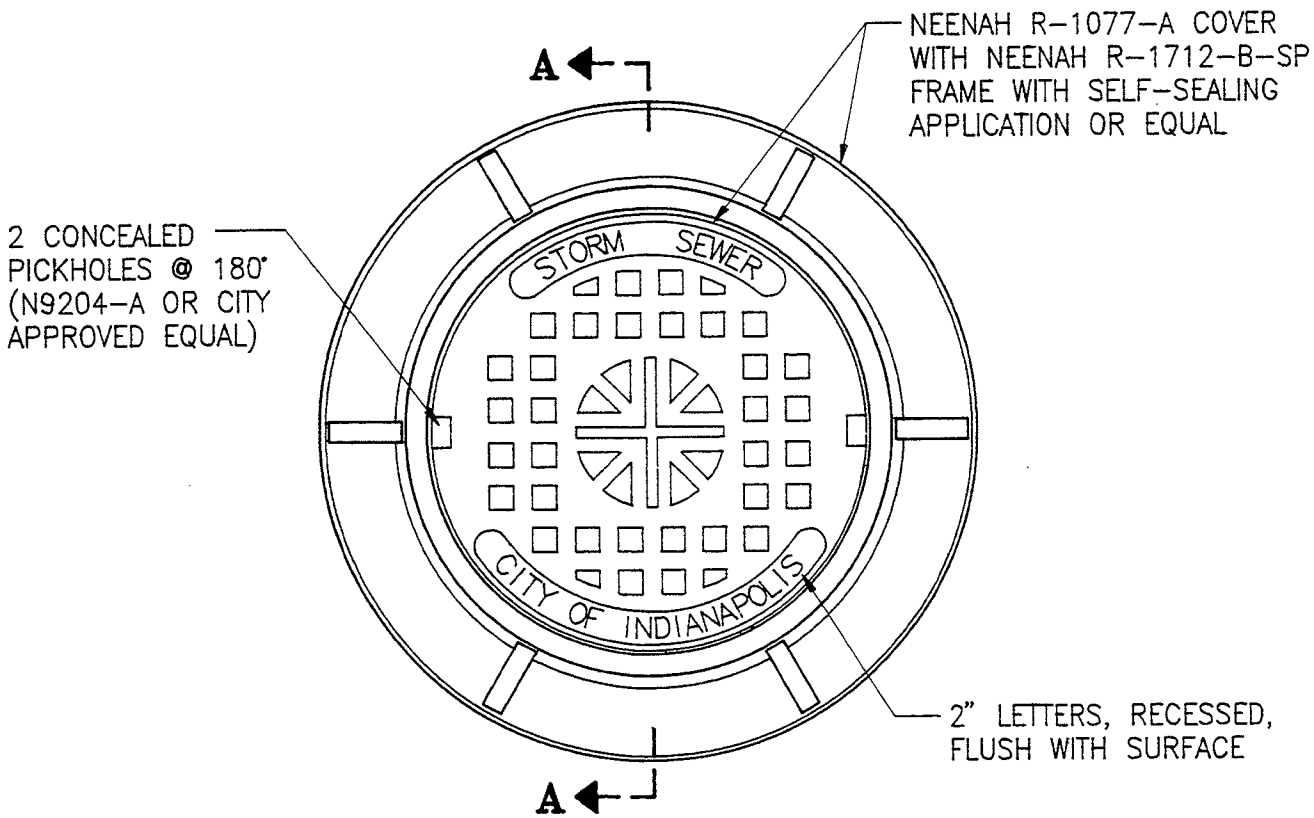

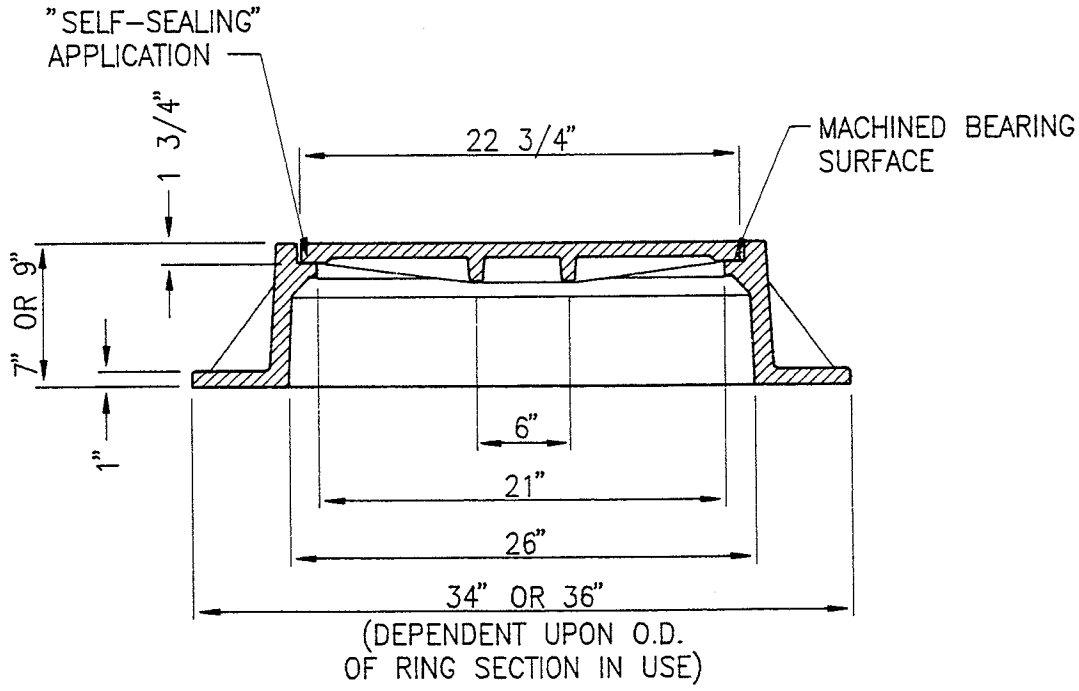

SECTION "A-A"

STORM SEWER MANHOLE FRAME & COVER

STANDARD MANHOLE

Figure 400-11

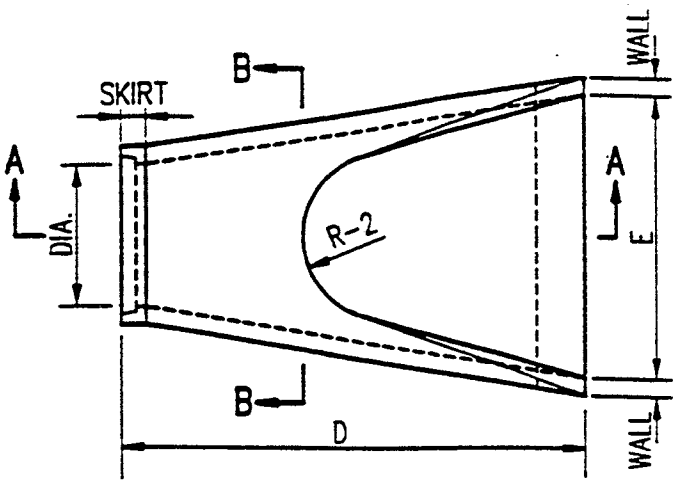

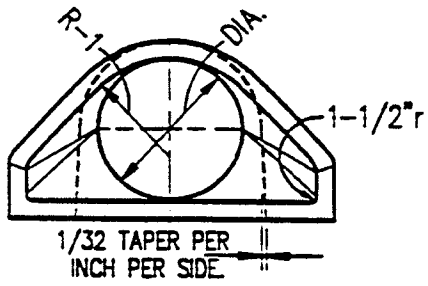

HORIZONTAL FLARE

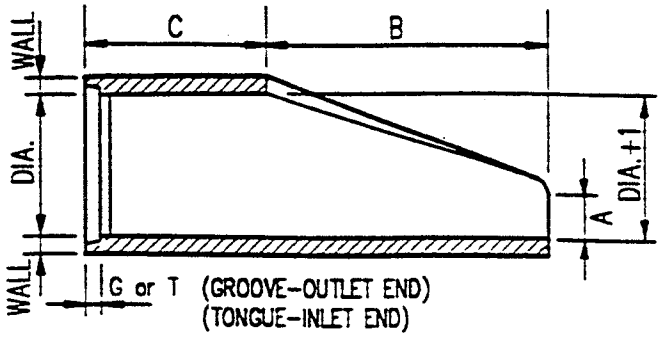

SECTION AA

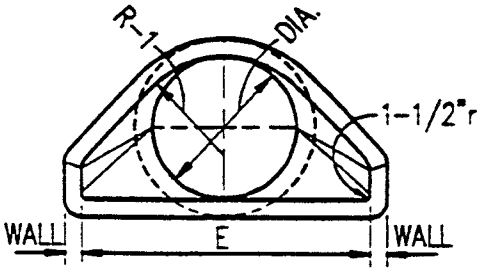

VERTICAL FLARE

SECTION BB

DIA.	WALL	G or T	WT. SEC	A	B	C	D	E	DIA.+1	R-1	R-2	SKIRT
12	2	1 1/2	530	4	24	48 7/8	72 7/8	24	13	10 1/16	9	3 1/2
15	2 1/4	2	740	6	27	46	73	30	16	12 1/2	11	3 1/2
18	2 1/2	2 1/2	990	9	27	46	73	36	19	15 1/2	12	4
21	2 3/4	2 1/4	1280	9	35	38	73	42	22	16 1/8	13	4
24	3	2 1/2	1520	9 1/2	43 1/2	30	73 1/2	48	25	16 11/16	14	4 1/2
27	3 1/4	2 1/2	1930	10 1/2	48	25 1/2	73 1/2	54	28	17 3/4	14 1/2	4 1/2
30	3 1/2	3	2190	12	54	19 3/4	73 3/4	60	31	18 5/16	15	5
33	3 3/4	3 3/8	3150	13 1/2	58 1/2	39 1/4	97 3/4	66	34	23 3/4	17 1/2	5 1/2
36	4	3 1/2	4100	15	63	34 3/4	97 3/4	72	37	24 1/16	20	5 1/2
42	4 1/2	3 3/4	5380	21	63	35	98	78	43	27 1/4	22	5 1/2
48	5	4 1/4	6550	24	72	26	98	84	49	28 1/8	22	5 3/4
54	5 1/2	4 3/4	8040	27	65	35	100	90	55	32 7/8	24	6 1/4
60	6	5	8750	30	60	39	99	96	61	36 3/4	24	6 3/4
66	6 1/2	5 1/2	10630	24	78	21	99	102	67	35 11/16	24	7 1/4
72	7	6	12520	34	78	21	99	108	73	38 5/8	24	7 3/4
78	7 1/2	6 1/2	14430	24	78	21	99	114	79	41 15/16	24	8 1/2
84	8	7	16350	24	78	21	99	120	85	44 13/16	24	9

NOTES: 1. MANUFACTURE OF END SECTION IS IN ACCORDANCE WITH APPLICABLE PORTIONS OF A.S.T.M. SPECIFICATION C76.

PRECAST CONCRETE FLARED HEADWALLS

Figure 400-12

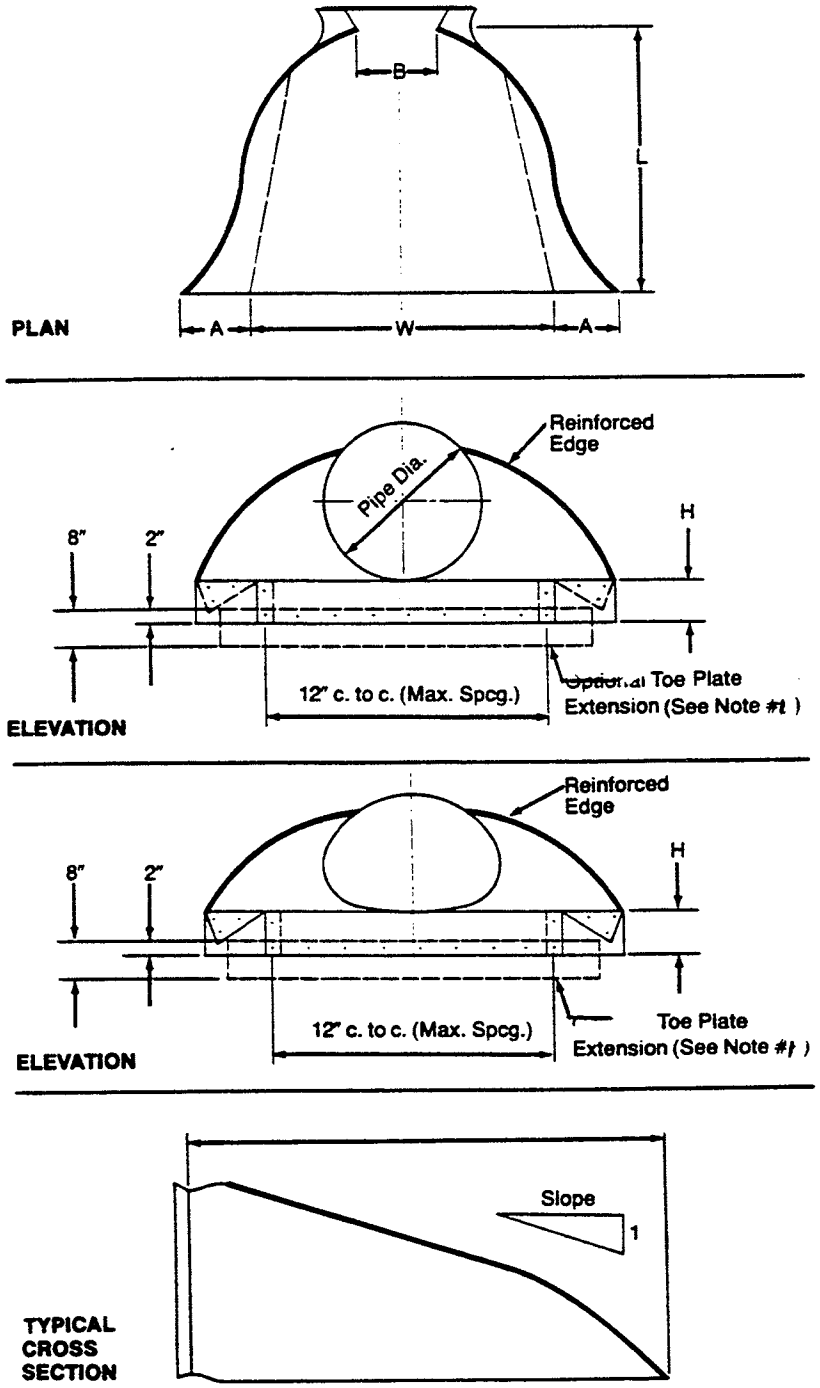

NOTE #1: Eighteen inch (18") toe-plate extensions required for all galvanized steel end sections.

TOE-PLATE EXTENSION DETAILS

Figure 400-13