OFFICE OF THE MARION COUNTY SURVEYOR
SECTION RECORD CORNER
SECTION 36 TOWNSHIP 15 RANGE 4
DATE: 5-6-04
PARTY CHIEF: Wilcoxen
CREW: HARRISON OVER STONE
TYPE OF MARKER: ~~Boat spike w/washer set~~ over ~~stone~~
METHOD OF ESTABLISHMENT: County: 2-10-99
IN. S.P.C. E ZONE NAD '83
NAME: 15043602
N: 495406.~~6870(m)~~ .7717(M) REGPS
E: 68404.~~7090(m)~~ .7189(M) 6-24-09 by BW

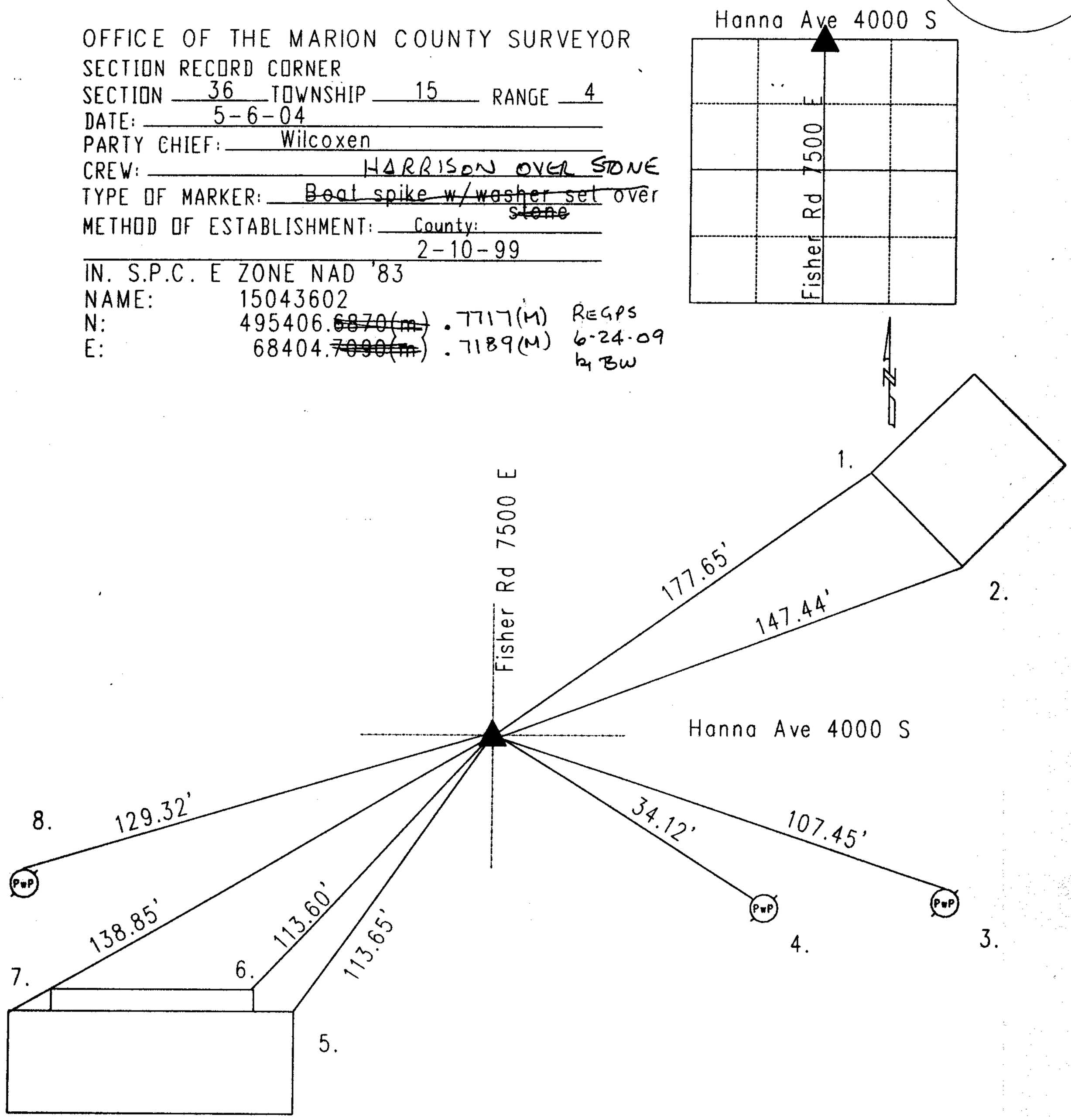

15043602

REF.	DISTANCE	DESCRIPTION
1.	177.65'	Westerly corner of Address 3939 stone
2.	147.44'	Southerly corner of "
3.	107.45'	Mag nail N PwP#1679 12"up
4.	34.12'	Mag nail w/brass washer NW PwP#159-679 15"up
5.	113.65'	NE corner of carport for ADDRESS 7425
6.	113.60'	NE corner of porch top concrete
7.	138.85'	NW corner of brick house
8.	129.32'	Mag nail N PwP#81-678 12"up