OFFICE OF THE MARION COUNTY SURVEYOR
SECTION RECORD CORNER
SECTION 21 TOWNSHIP 16 RANGE 3
DATE: ~~9-24-01~~ 8-25-06
PARTY CHIEF: Wilcoxen
CREW:
TYPE OF MARKER: Harrison
METHOD OF ESTABLISHMENT: County: 8-30-98

IN. S.P.C. E ZONE NAD '83
NAME: 16032101
N: 508157.0148(m)
E: 52940.4170(m)

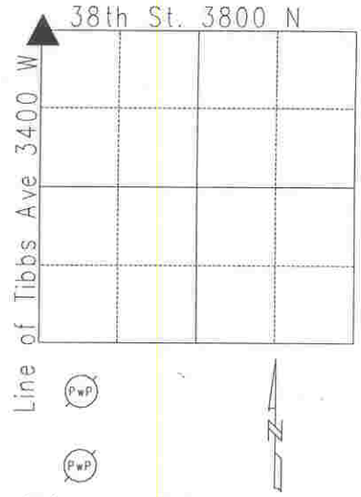

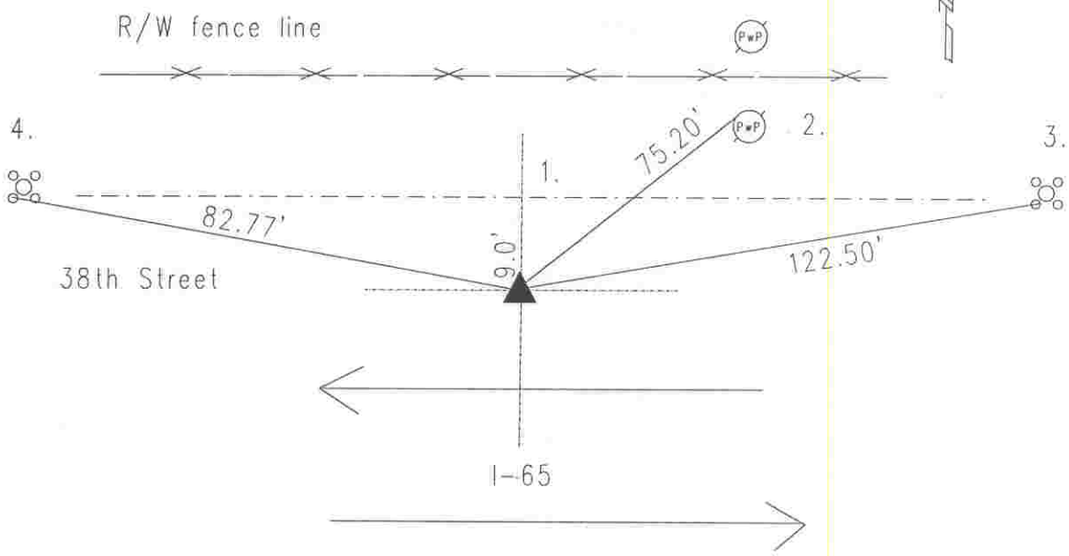

Original post set 1820 by Wm. B. Laughlin with witnesses: 12" sugar N 44 W 32 links, 8" ironwood S 50 E 15 links per Marion County Atlas pg. 7. Survey by H.B. Fatout 1-24-1877 called no stone nor witness: per Wayne Township Legal Survey Book pg. 63. MCSO 8-2-43 called stone. Monroe 9-1-55 called a pipe set. MCSO 3-14-63 called same. MCSO 4-30-64 called same. MCSO 6-29-64 called same. Miller 11-26-75 called brass plug. Excavated by Wilcoxen 8-30-98 and brass plug was destroyed but the concrete base was present. Harrison set. Re-tied 9-24-01 by Wilcoxen.

16032101

REF.	DISTANCE	DESCRIPTION
1.	9.0'+/-	Due N to Edge of Pavement: 38th Street
2.	75.20'	PK nail NW PwP#81-400 A 20"up
3.	122.50'	Cut 'x' SW-bolt of aluminum pole base
4.	82.77'	Cut 'x' SW-bolt of aluminum pole base