OFFICE OF THE MARION COUNTY SURVEYOR
SECTION RECORD CORNER
SECTION 16 TOWNSHIP 16 RANGE 4
DATE: 10-16-96 2-24-04
PARTY CHIEF: Wilcoxen
CREW:
TYPE OF MARKER: Harrison
METHOD OF ESTABLISHMENT: County: History
6-8-89 '96 EDM

IN. S.P.C. ZONE E, NAD 83
NAME: 16041602
N: 509867.1690(m)
E: 63480.3170(m)

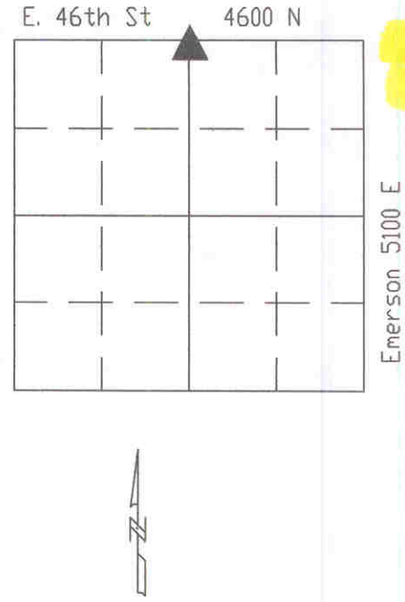

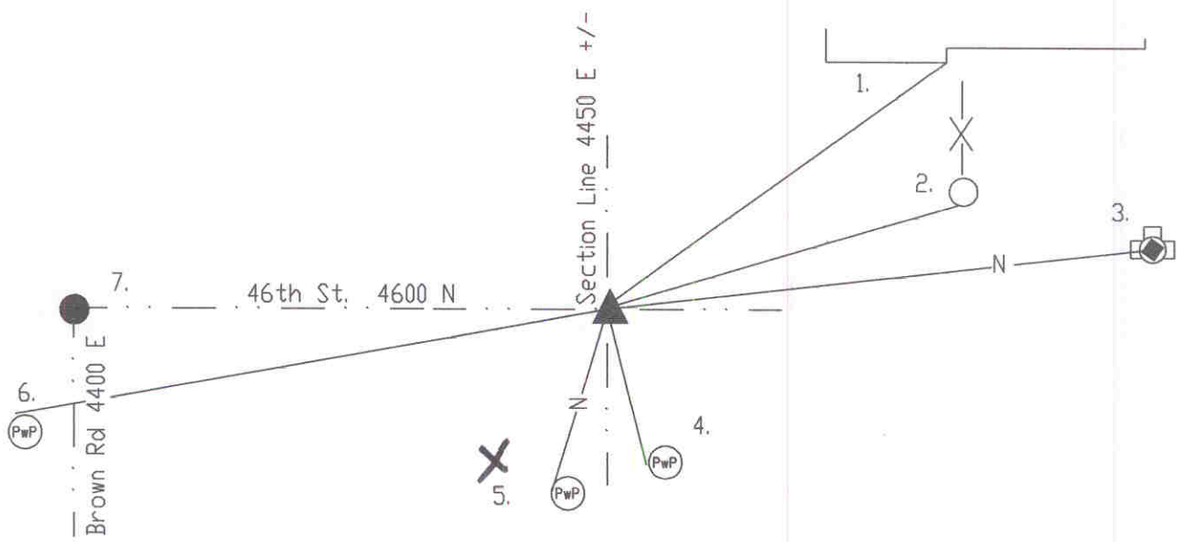

Original post set 1820 by Hendricks with witnesses: 16" beech N 22 W 30 links, 22" dogwood S 43 E 52 links per Marion County Atlas pg. 11. Hosbrook 4-29-1856 called a fd original stake per Washington Township Legal Survey Book pg. 24. Clark 5-4-31 called stone. Monroe 12-9-55 called same. Monroe 8-13-58 called brass plug in box. Wilcoxen 12-18-75 called 'x' on rim of steel box. Wilcoxen 6-8-89 called brass plug in steel box. Excavated by Wilcoxen 10-16-96 and Harrison set.

HC641602

REF.	DISTANCE	DESCRIPTION
1.	124.06'	SE garage #4408 corner of stone
2.	104.86'	'c' steel fence post
3.	199.00'	Top nut
4.	45.04'	PK W PwP#132-373B 48"up
5.	~~92.39'~~	~~Lg. Rd W guide pole 54"up~~
6.	175.63'	Sm. PK N PwP#70-372 10"up
7.	147'+/-	Due W to approx C/L "Brown Rd 4400 E"