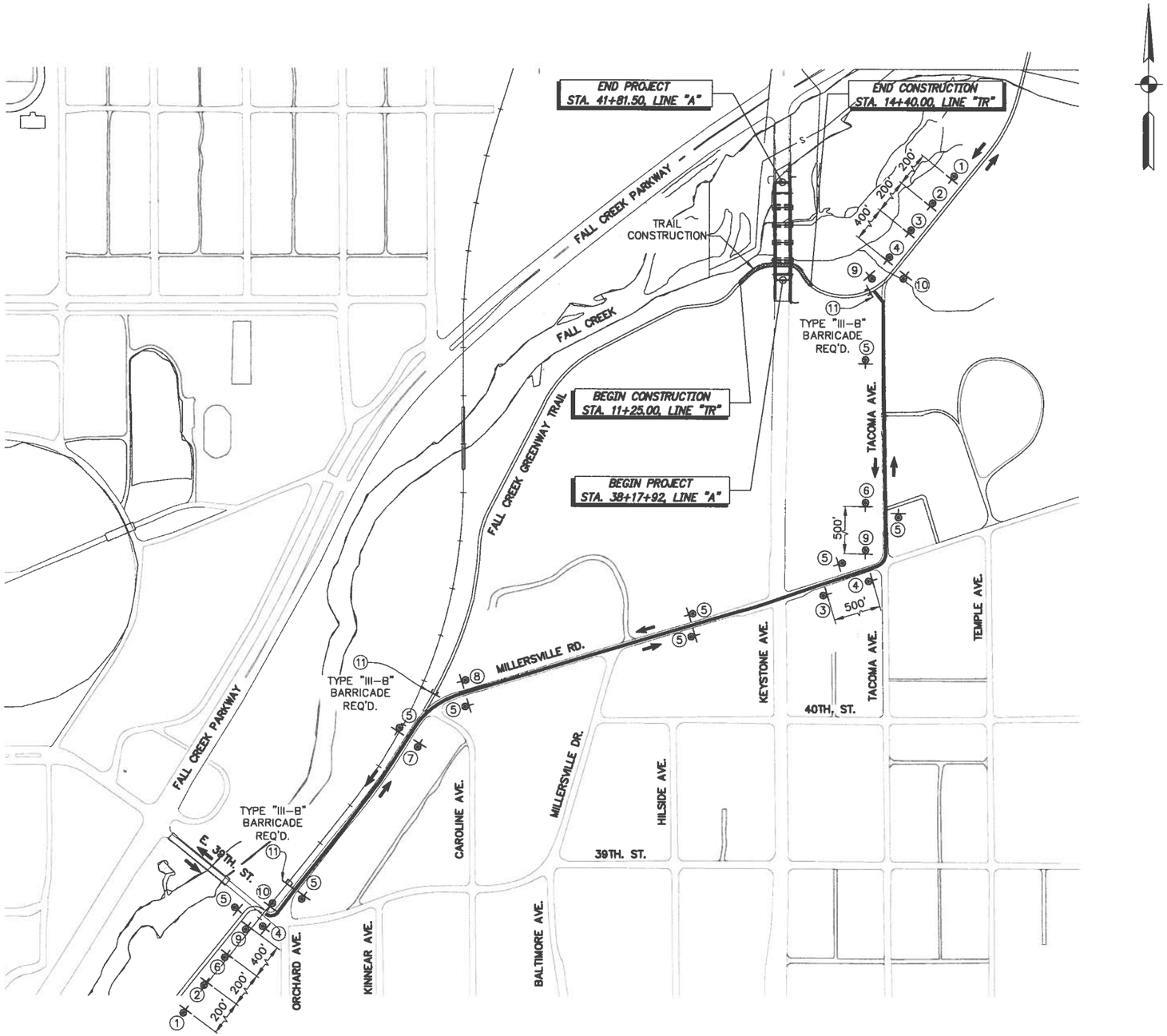

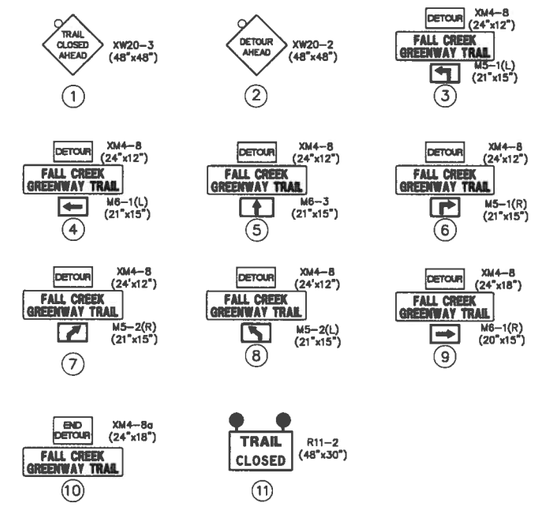

LEGEND

- CONSTRUCTION SIGN W/TYPE "A" LIGHT
- CONSTRUCTION SIGN
- BARRICADE TYPE III-A OR TYPE III-B AS NOTED
- DETOUR ROUTE FALL CREEK GREENWAY TRAIL
- DIRECTION OF DETOUR
- HIGH INTENSITY LIGHT
- LOW INTENSITY LIGHT

M.O.T. DETOUR QUANTITIES

MAINTAINING TRAFFIC	LUMP SUM
CONSTRUCTION SIGN A	7 EACH
DETOUR ROUTE MARKER ASSEMBLY	23 EACH
TYPE III-B BARRICADE	36 LFT

IDPW Project No.: BR-18-075

BRAD S. FARIS REGISTERED No. 9300175 STATE OF INDIANA PROFESSIONAL ENGINEER

RECOMMENDED FOR APPROVAL Brad S. Faris 07/19/13
DESIGN ENGINEER DATE

DESIGNED: BSF DRAWN: VSE
CHECKED: RET CHECKED: BSF

INDIANA DEPARTMENT OF TRANSPORTATION

MAINTENANCE OF TRAFFIC DETOUR ROUTE KEYSTONE AVENUE

HORIZONTAL SCALE	BRIDGE FILE
1" = 200'	MARION 1807F
VERTICAL SCALE	DESIGNATION
N/A	1173063
SURVEY BOOK	SHEETS
N/A	13 of 74
CONTRACT	PROJECT
B-35423	1173063

File Name: F:\2011\11-2721 Keystone Avenue\DESIGN\DRAWINGS\MOT\2721 MOT DETOUR ROUTE.dwg Plot Date: 7/15/2013 Plotted By: Bfaris